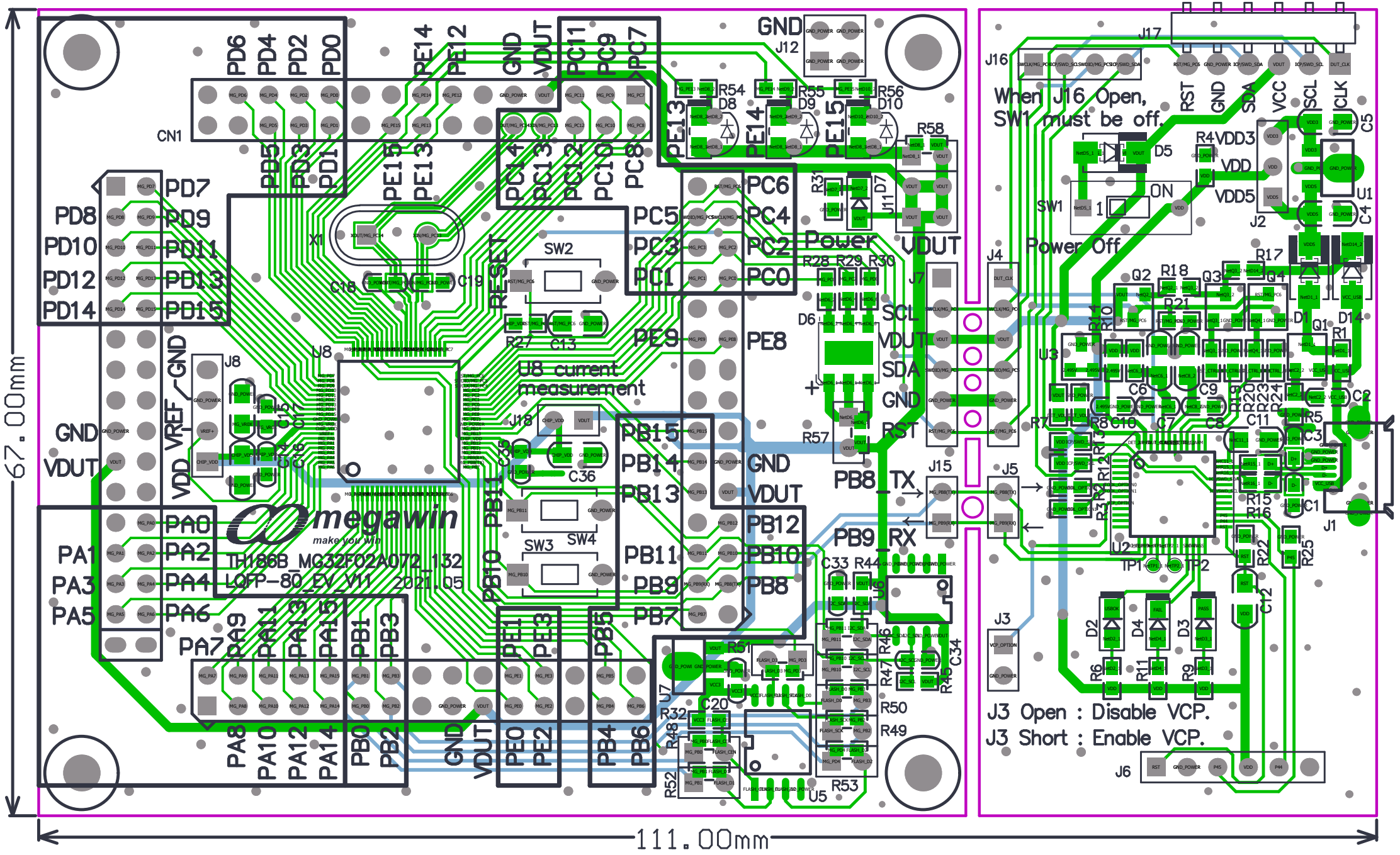

67.00mm
111.00mm
When J16 Open,
SW1 must be off.
Power Off
U8 current
measurement
megawin
make you win
TH186B_MG32F02A072_132
LQFP-80_EV_V11 2021.05
J3 Open : Disable VCP.
J3 Short : Enable VCP.

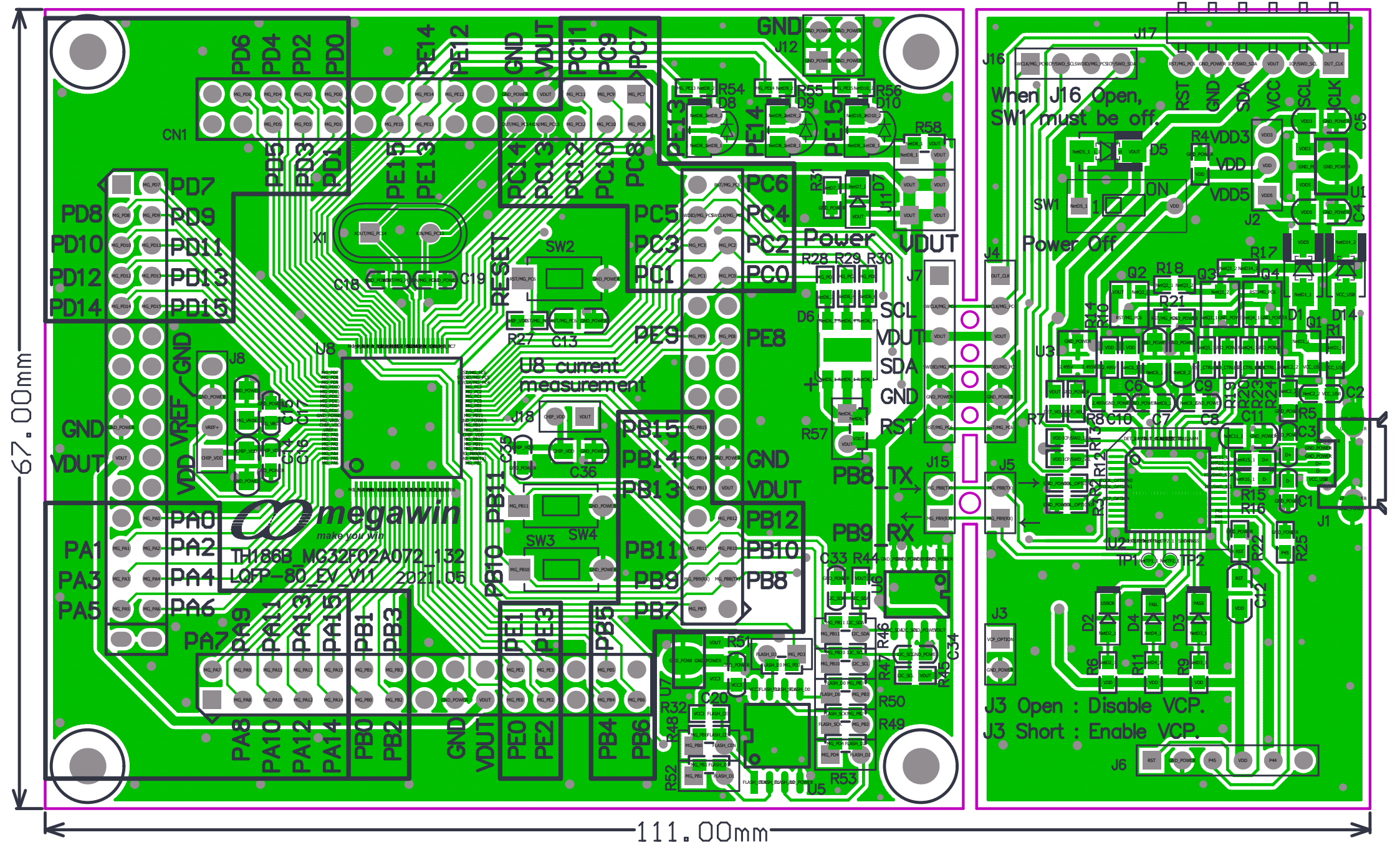

67.00mm
111.00mm
When J16 Open,
SW1 must be off.
Power Off
U8 current
measurement
megawin
make you win
TH186B_MG32F02A072_132
LQFP-80_EV_V11 2021.05
J3 Open : Disable VCP.
J3 Short : Enable VCP.

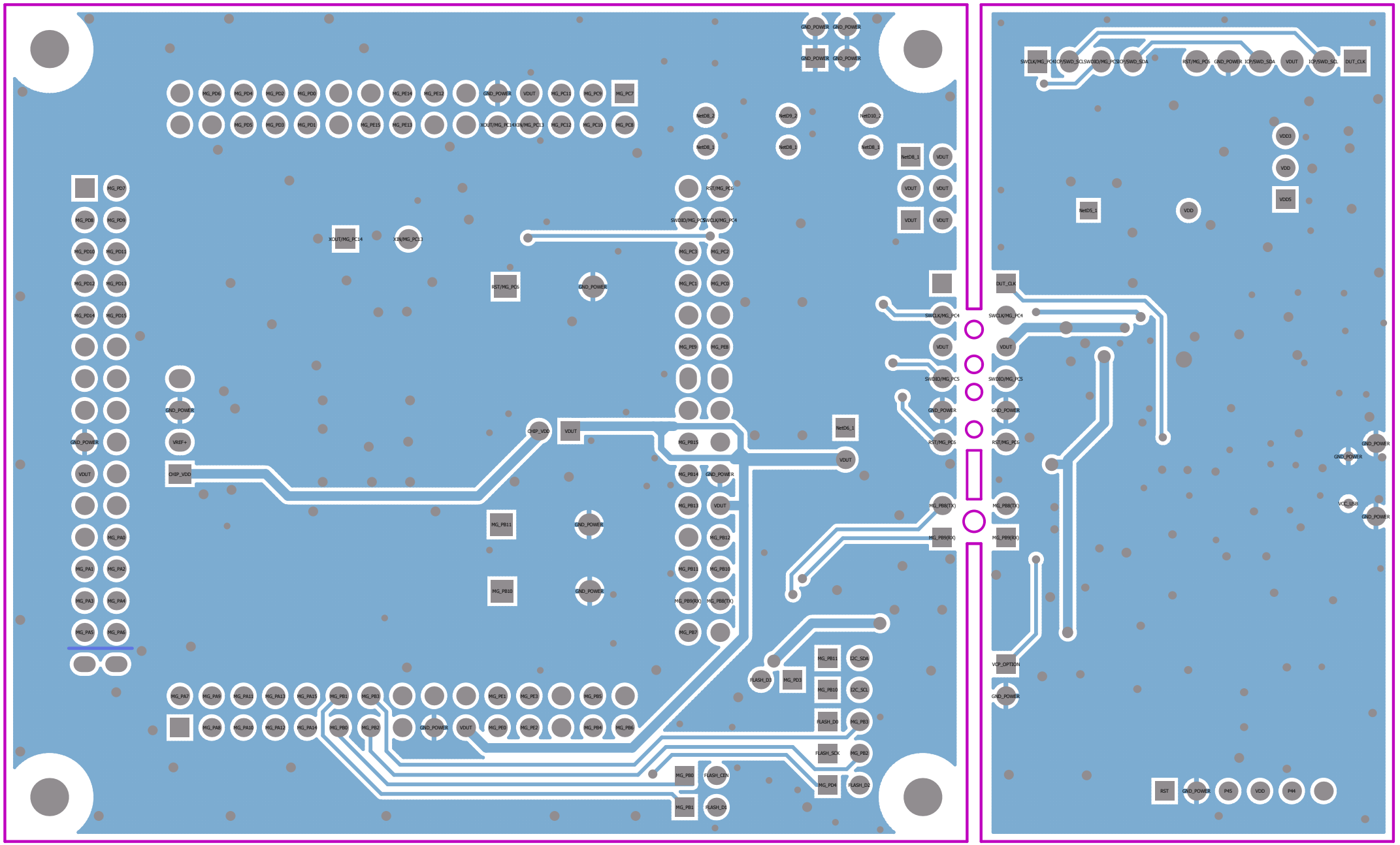
GND_POWER
VDUT
XOUT/MG_PC14
XIN/MG_PC13
RST/MG_PC6
SWDIO/MG_PC5
SWCLK/MG_PC4
CHIP_VDD
VREF+
MG_PB15
MG_PB14
MG_PB13
MG_PB12
MG_PB11
MG_PB10
MG_PB9(RX)
MG_PB8(TX)
FLASH_D3
FLASH_D0
FLASH_SCK
FLASH_CEN
FLASH_D1
FLASH_D2
I2C_SDA
I2C_SCL
VCP_OPTION
OUT_CLK
VDD3
VDD
VDD5
RST
P45
P44

Main MCU

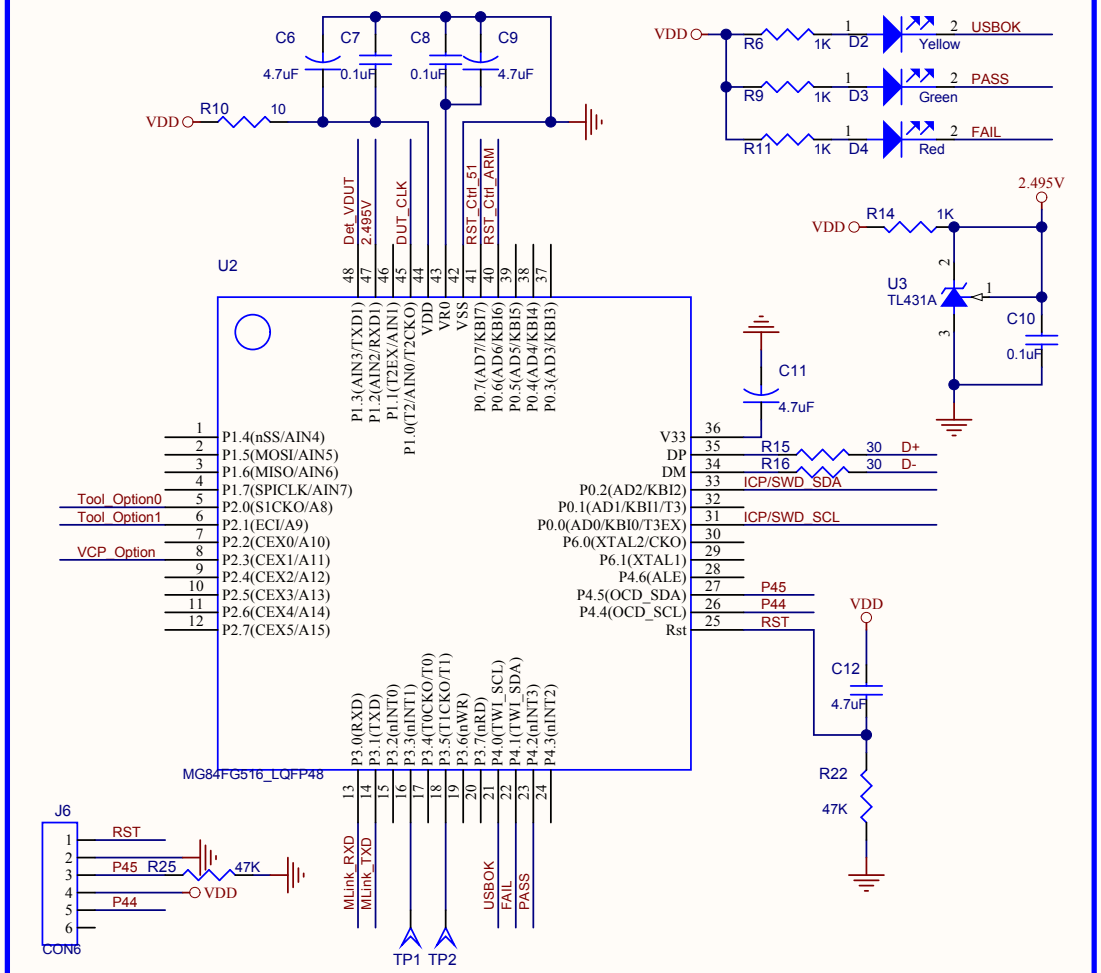

ICE Interface

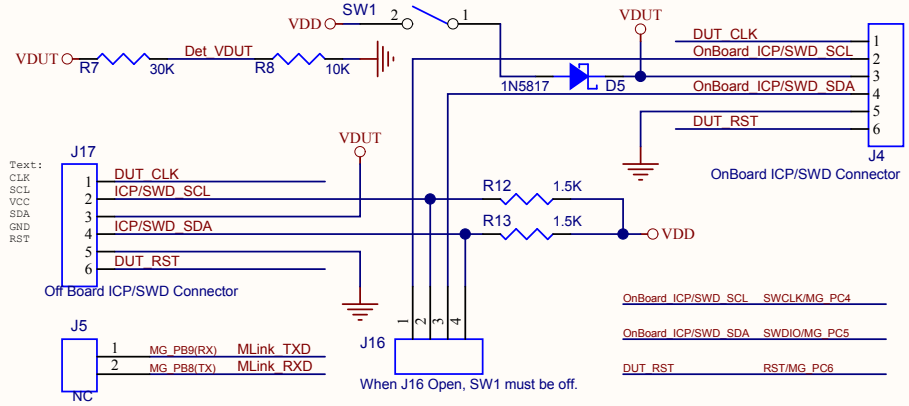

RST Pin Ctrl

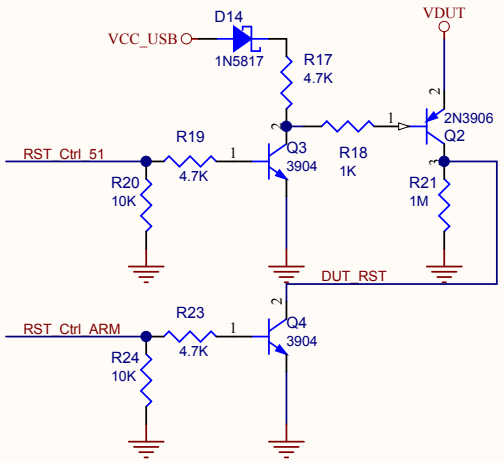

Tool Option

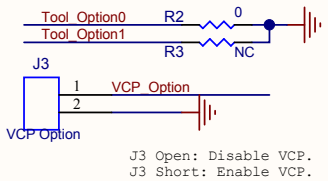

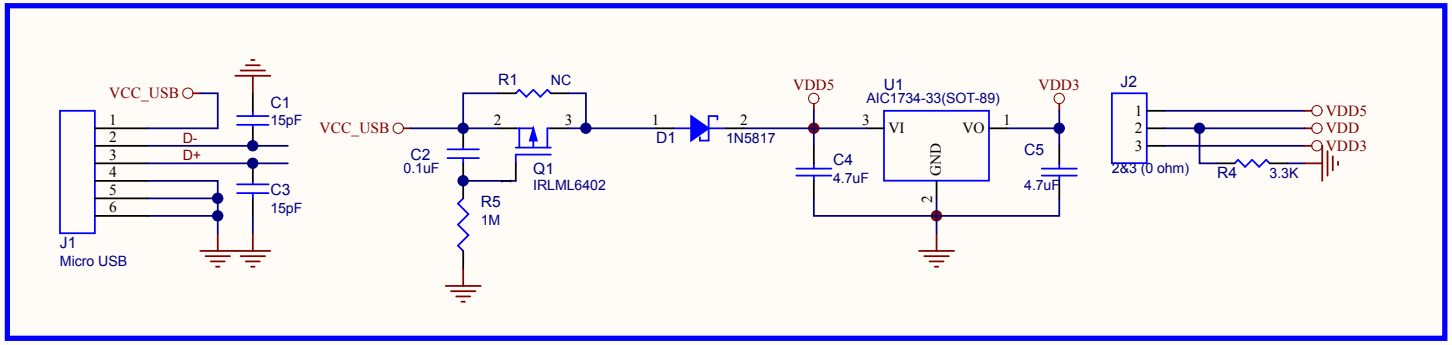

megawin 笙泉科技股份有限公司
make you win

http://www.megawin.com.tw TEL:886-3-5601501 FAX:886-3-5601510

Design by	Title : TH186B_MG32F02A132_LQFP-80_EV_V11		
	Doc. : 1_MLink_V11.SchDoc		
Size : A4	Date : 2021/5/12	Sheet : 2 page	Rev :

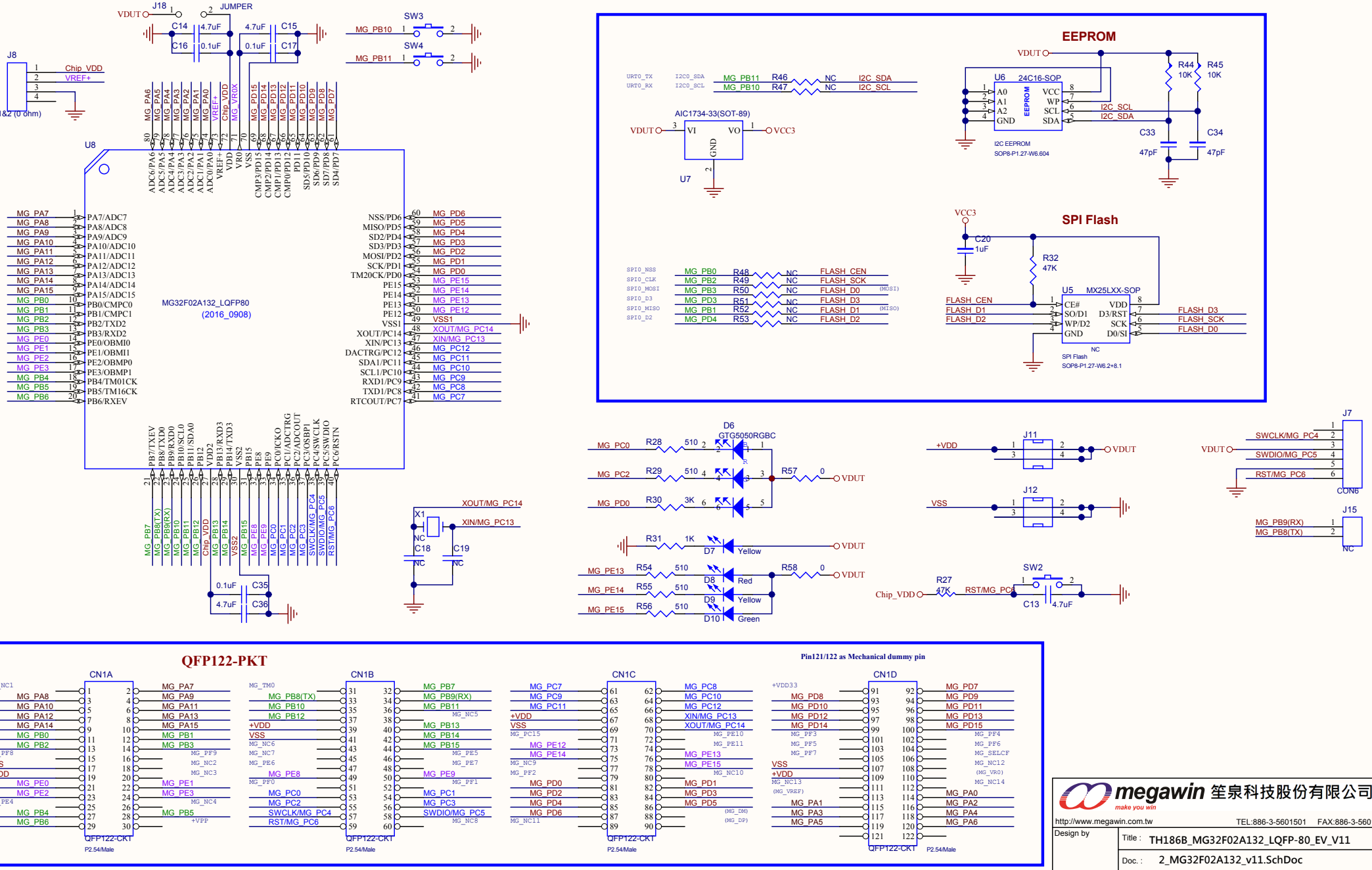
EEPROM
SPI Flash
QFP122-PKT
Pin121/122 as Mechanical dummy pin
MG32F02A132_LQFP80
(2016_0908)
megawin 笙泉科技股份有限公司
make you win
http://www.megawin.com.tw
TEL:886-3-5601501 FAX:886-3-5601510
Design by
Title : TH186B_MG32F02A132_LQFP-80_EV_V11
Doc. : 2_MG32F02A132_v11.SchDoc
Size : A4
Date : 2021/5/12
Sheet : 2 page
Rev :