# CGF082A
# Data Sheet

*8Bit Single-Chip Microcontroller*
*Embedded 600V 3-Phase Gate-Driver*

**Version: 0.20**

This document contains information on a new product under development by CheerGoal.
CheerGoal reserves the right to change or discontinue this product without notice.
© CheerGoal Electronics Co., Ltd. 2025 All rights reserved.

# Features

## Motor Driving Engine (MDE)

- Estimated Angle Phase Lock Loop (PLL)
- Field Oriental Control (FOC) Sine-Wave Solutions
- Slide Mode Rotor Position Estimated (SMO)
- Space Vector PWM (SVPWM)
- Supports Digital OCP and Analog OCP (Over Current Protection)
- Supports Initial Position Detection (IPD)
- Programmable Dead-Time
- Independent PI Controller
- Independent General Low Pass Filter
- Frequency Generator

## Gate Driver

- Embedded 600V 3-phase gate-driver
- Under voltage lockout for VCC15 and VBS
- Built-in 15V/5V LDO

## Embedded MCU

- MCS®-51 Compatible
- 1T 8052 Central Processing Unit
- 4.5V to 5.5V Operation Range
- 4 Level Priority Interrupt
- 13 Interrupt Sources
- 1 External Interrupts (INT1N)
- 2 External Interrupts (INT0N, INT1N)
- 2 External OCP Interrupts (AOCP, OCP)
- Memory Size:
- 16KB Flash Program Memory
- 256 x 8-bit IRAM
- 512 x 8-bit XRAM
- 256 Byte EEPROM
- Up to 25 General-Purpose Input / Output (GPIO) Pins
- Three 16-bit Timer/Counters
- Watchdog (WD) Timer
  8CH 10-bit ADC
- Full Duplex UART Serial Channel
- IIC Interface (Master/Slave Mode)
- One Wire RF/IR Receiver Output Signal Decode
- CRC16-CCITT Function
- Independent General PWM
- External Capture
- Internal Capture
- Fast Multiplication-Division Unit (MDU): 16*16,32/16, 16/16, 32-bit L/R shifting and 32-bitnormalization

# List of Contents

**Features** ..... **2**
**List of Contents** ..... **3**
**1. General Description** ..... **8**
**2. Block Diagram** ..... **9**
**3. Pin Configurations** ..... **10**
3.1. Package Instruction LQFP7x7- 48 ..... 10
3.2. Pin Description ..... 11
**4. Absolute Maximum Ratings** ..... **14**
**5. D.C. Characteristics** ..... **15**
**6. A.C. Characteristics** ..... **16**
**7. OPA Characteristics** ..... **17**
**8. A/D Converter Characteristics** ..... **17**
**9. Special Function Registers (SFR)** ..... **19**
**10. CGF082A SFRs and Reset Value** ..... **21**
**11. External Special Function Registers (XSFR)** ..... **23**
**12. CGF082A XSFRs and Reset Value** ..... **23**
**13. Memory** ..... **25**
13.1. Program Memory ..... 25
13.2. Data Memory ..... 25
13.2.1 Data Memory (IRAM)(00H~FFH) ..... 25
13.2.2 Data Memory (XRAM)(F000H~F1FFH) ..... 25
**14. Instruction Set** ..... **26**
**15. MCU** ..... **31**
15.1 8051 Engine ..... 31
15.1.1 ACC (Accumulator) ..... 31
15.1.2 B (B Register) ..... 31
15.1.3 PSW (Program Status Word Register) ..... 32
15.1.4 SP (Stack Pointer) ..... 33
15.1.5 DP0 (Data Pointer 0) ..... 33
15.1.6 DP1 (Data Pointer 1) ..... 34
15.1.7 AUX(Auxiliary Register) ..... 35
15.1.8 RCON (Internal RAM Control Register) ..... 35
15.2 GPIO ..... 36
15.2.1 Port ..... 37
15.2.2 PINCONG (Pin Configure Register) ..... 38
15.2.3 PINSET (Pin I/O Setting Register) ..... 40
15.3 Clock Structure ..... 43
15.4 Timer ..... 44
15.4.1 PFCON (Peripheral Frequency Control Register) ..... 45
15.4.2 TMOD (Timer 0/1 Mode Register) ..... 46
15.4.3 TCON (Timer 0/1Control Register) ..... 47
15.4.4 T2CON (Timer2 Control Register) ..... 47
15.4.5 Timer0 Mode 0 ..... 49
15.4.6 Timer0 Mode 1 ..... 49
15.4.7 Timer0 Mode 2 ..... 49

15.4.8 Timer0 Mode 3 ..... 49
15.4.9 Timer1 Mode 0 ..... 50
15.4.10 Timer1 Mode 1 ..... 50
15.4.11 Timer1 Mode 2 ..... 50
15.4.12 Timer2 Mode 0 ..... 50
15.4.13 Timer2 Mode 1 ..... 51
15.4.14 Timer2 Mode 2 ..... 51
15.4.15 Timer2 Mode 3 ..... 51
15.5 Watchdog Timer ..... 52
15.5.1 WDTC (Watchdog Timer Control Register) ..... 53
15.5.2 TAKEY (Time Access Key Register) ..... 54
15.5.3 WDTK (Watchdog Timer Refresh Key) ..... 54
15.6 Serial Port (UART) ..... 55
15.6.1 SCON (Serial Port Control Register) ..... 58
15.6.2 SBUF (Serial Port Data Buffer) ..... 60
15.6.3 SREL (Serial Port Reload Register) ..... 60
15.7 Power Management ..... 60
15.7.1 STOP MODE ..... 60
15.7.2 IDLE MODE ..... 61
15.8 Reset ..... 62
15.9 Interrupt Controller ..... 63
15.9.1 IEN0 (Interrupt Enable Register 0) ..... 65
15.9.2 IEN1 (Interrupt Enable Register 1) ..... 66
15.9.3 IRCON1 (Interrupt Request Register 1) ..... 67
15.9.4 IP (Interrupt Priority Register) ..... 68
**16. 10-bit Analog-to-Digital Converter (ADC) ..... 69**
16.1 ADCCONT (ADC Control Register) ..... 70
16.2 ADCSTR (ADC Start Convert and Setting Register) ..... 71
16.3 ADCDLY (ADC Sample Delay Register ) ..... 72
16.4 ADC Data Register ..... 73
16.5 ADC1 and ADC2 Offset Value Register ..... 74
**17. EEPROM ..... 75**
17.1 EE_ADDR (EEPROM Read/Write Address Register) ..... 76
17.2 EE_DATA (EEPROM Read/Write Data Register) ..... 76
17.3 EE_CMD (EEPROM Command Register) ..... 76
**18. IIC Emulation ..... 77**
18.1 IICCTL (IIC Control Register) ..... 77
18.2 IICS (IIC Status Register) ..... 78
18.3 IICA1 (IIC Address1 Register) ..... 79
18.4 IICA2 (IIC Address2 Register) ..... 80
18.5 IICRWD (IIC Read Write Data Register) ..... 80
18.6 IICEBT (IIC Enable Transaction Register) ..... 81
**19. Capture ..... 82**
19.1 External Capture ..... 83
**19.1.1 EXT_CAPCONT (External Capture Control Register)** ..... 83
**19.1.2 EXT_CAPT (External Capture Total Count)** ..... 84
**19.1.3 EXT_CAPH (External Capture High-Level Count)** ..... 84

19.2 Internal Capture ..... 85
**19.2.1 INT_CAPCONT (Internal Capture Control Register)** ..... 85
**19.2.2 INT_CAPT (Internal Capture Total Count)** ..... 86
**19.2.3 INT_CAPH (Internal Capture High-Level Count)** ..... 86
**20. Multiplication and Division Unit (MDU)** ..... **87**
20.1 MD_MODE (MDU Control Mode) ..... 87
20.2 MD_CONT (MDU Control Register) ..... 88
20.2.1 MDEF ..... 88
20.2.2 MDOV ..... 89
20.3 MD0 – MD5 (Multiplication Division Register) ..... 89
20.4 MDU Operation Description ..... 90
20.4.1 Loading the MDx registers ..... 90
20.4.2 Executing calculation ..... 90
20.4.3 Reading the result from the MDx registers ..... 90
20.4.4 Shifting ..... 91
20.4.5 Normalizing ..... 91
**21. Cyclic Redundant Check (CRC)** ..... **92**
21.1 CRC_CTRL (CRC Control Register) ..... 93
21.2 CRC_DIN (CRC Data Register) ..... 93
21.3 CRC_DOUT (CRC Output Remainder Data Register) ..... 93
21.4 CRC_STR_BANK (Start Bank Index Register for Bank CRC Computation) ..... 94
21.5 CRC_END_BANK (End Bank Index Register for Bank CRC Computation) ..... 94
**22. Independent General PWM** ..... **95**
21.1 IPWM_CTRL (Independent General PWM Register) ..... 95
21.2 IPWM_CYC (Independent General PWM Cycle Register) ..... 95
21.3 IPWM_DUTY (Independent General PWM Duty Register) ..... 96
**23. One Wire RF/IR Signal Decode** ..... **97**
23.1 IR_DEC_SET (IR Data Decoder Setting Register) ..... 97
23.2 IR_DEC_CTRL (IR Data Decoder Control Register) ..... 100
23.4 IR_HEADER_Z2 (IR Data Header Zone2 Cycle Register) ..... 101
23.5 IR_STOP_Z (IR Data STOP Zone Cycle Register) ..... 101
23.6 IR_DOUT0~IR_DOUT5 (IR Decode Output Register Byte0 ~ Byte5) ..... 102
**24. Software Reset** ..... **103**
24.1 SOFT_RST_KEY (Software Reset Key Register) ..... 103
24.2 SOFT_RST_EN (Software Reset Enable Register) ..... 103
**25. Motor Driving Engine (MDE)** ..... **104**
25.1 MDE Architecture ..... 104
25.2 Coordinate Transformation Block ..... 105
25.2.1 Coordinate Transformation Block Architecture ..... 105
25.2.2 CLAEKE Transform ..... 105
25.2.3 PARK Transform ..... 106
25.2.4 Coordinate Transformation Block description and setting ..... 106
25.3 Current Control Loop Block ..... 108
25.3.1 Current Control Loop Block Architecture ..... 108
25.3.2 Current Control Loop Block description and setting ..... 108
25.4 Inverse Coordinate Transformation Block ..... 110
25.4.1 Inverse Coordinate Transformation Block Architecture ..... 110

25.4.2 Inverse PARK Transform ..... 110
25.4.3 Inverse CLARKE Transform ..... 111
25.5 SMO Rotor Position Estimation Block ..... 113
25.5.1 SMO Rotor Position Estimation Block Architecture ..... 113
25.5.2 SENSORLESS FOC For PMSM ..... 113
25.5.3 Motor Model ..... 113
25.5.3 Current Observer ..... 115
25.5.4 BEMF Estimation ..... 116
25.5.5 Rotor Position Calculation ..... 116
25.5.6 SMO Rotor Position Estimation Block description and setting ..... 117
25.6 SVPWM Engine Block ..... 118
25.6.1 SVPWM Engine Block Architecture ..... 118
25.6.2 SVPWM Engine Block Architecture ..... 118
25.6.3 7-Segment SVPWM ..... 119
25.6.4 5-Segment SVPWM ..... 120
25.6.5 SVPWM Over Modulation ..... 120
25.6.6 Motor PWM Output Setting ..... 121
25.7 Speed Control Loop Block ..... 125
25.7.1 Speed Control Loop Block Architecture ..... 125
25.7.2 Speed Control Loop Block description and setting ..... 125
25.8 PI Controller ..... 127
25.8.1 PI Controller Block Architecture ..... 127
25.8.2 PI controller Block description and setting ..... 127
25.8.3 User PI controller Block description and setting ..... 130
25.9 IPD ( Initial Position Detection ) ..... 131
25.9.1 IPD Control Register ..... 131
25.9.2 IPD Pattern Define Register ..... 132
25.10 OCP ( Over Current Protection ) ..... 134
25.10.1 OCP Block Architecture ..... 134
25.10.2 OCP Block description and setting ..... 134
25.11 GEN_LPF (General Low-Pass Filter ) ..... 136
25.11.1 LPF Block Architecture ..... 136
25.10.2 LPF Block description and setting ..... 136
25.12 FG (Frequency Generator Control ) ..... 138
25.12.1 FG Control ..... 138
25.13 MDE SFR List ..... 139
25.13.1 MOTOR_CONT1 SFR ..... 139
25.13.2 MOTOR_CONT2 SRF ..... 139
25.13.3 Field Oriented Control SFR ..... 141
25.13.4 PI_GAIN SFR (PI- Controller GAIN) ..... 142
25.13.5 PI_TMSR SFR (PI Tracking Mode Select Register) ..... 143
25.13.6 SP_CYC SFR ..... 143
25.13.7 PI-Control Data SFR ..... 144
25.13.8 Sliding Mode Observer Data SFR ..... 146
25.13.9 Field Oriented Controller Data SFR ..... 146
25.13.10 MPWMCONT1 SFR ..... 147
25.13.11 MPWMCONT2 SFR ..... 147

25.13.12 MPWMDT SFR ..... 148
25.13.13 MPWMINV SFR ..... 148
25.13.14 MPWM DATA SFR ..... 148
25.13.15 Analog OCP Control SFR ..... 149
25.13.16 DOCPN Control SFR ..... 150
25.13.17 IPD Control SFR ..... 150
25.13.18 IPD Data SFR ..... 151
25.13.19 General Low Pass Filter SFR ..... 152
25.13.20 FG Control Register SFR ..... 152
25.13.21 Coordinate Transformation Block Signals observe XSFR ..... 153
25.13.22 Inverse Coordinate Transformation Block Signals observe XSFR ..... 153
25.13.23 BEMF Estimation Signals observe XSFR ..... 153
**26. SYNC ..... 154**
**27. HV Gate-Driver Function Description ..... 155**
**27.1 Low Side Power Supply (VCC15, SGND, PGND)** ..... 155
27.2 High Side Power Supply (VBU-VSU, VBU-VSU, VBU-VSU ) ..... 156
27.3 Low Side and High Control Input Logic (HU,V,W / LU,V,W) ..... 156
27.4 Dead-Time ..... 157
27.5 Gate Driver (HOU,V,W, LOU,V,W) ..... 157
27.6 Absolute Maximum Ratings ..... 158
27.7 Recommended Operating Conditions ..... 158
27.8 Static Electrical Characteristics ..... 159
27.9 Dynamic Electrical Characteristics ..... 160
**28. Package Information ..... 161**
28.1 LQFP-48 7x7mm (AD48) Outline Dimensions ..... 161
28.2 Marking Distinguish ..... 162
28.2.1 Standard Ink (w/o code) ..... 162
28.2.2 Customization Ink (with customization code) ..... 162
**29. Ordering Information ..... 163**
29.1 Standard Product Name ..... 163
29.2 Customization Product Name ..... 163
**30. Revision History ..... 164**
**31. Disclaimers ..... 165**

# 1. General Description

The CGF082A is a highly integrated motor drive controller. The CGF082A is composed of FOC sensor-less MCU and 600V 3-phase Gate-Driver that suit for under DC 400V and medium motor system, for example household fan、water pump、industry fan…etc.

## 2. Block Diagram

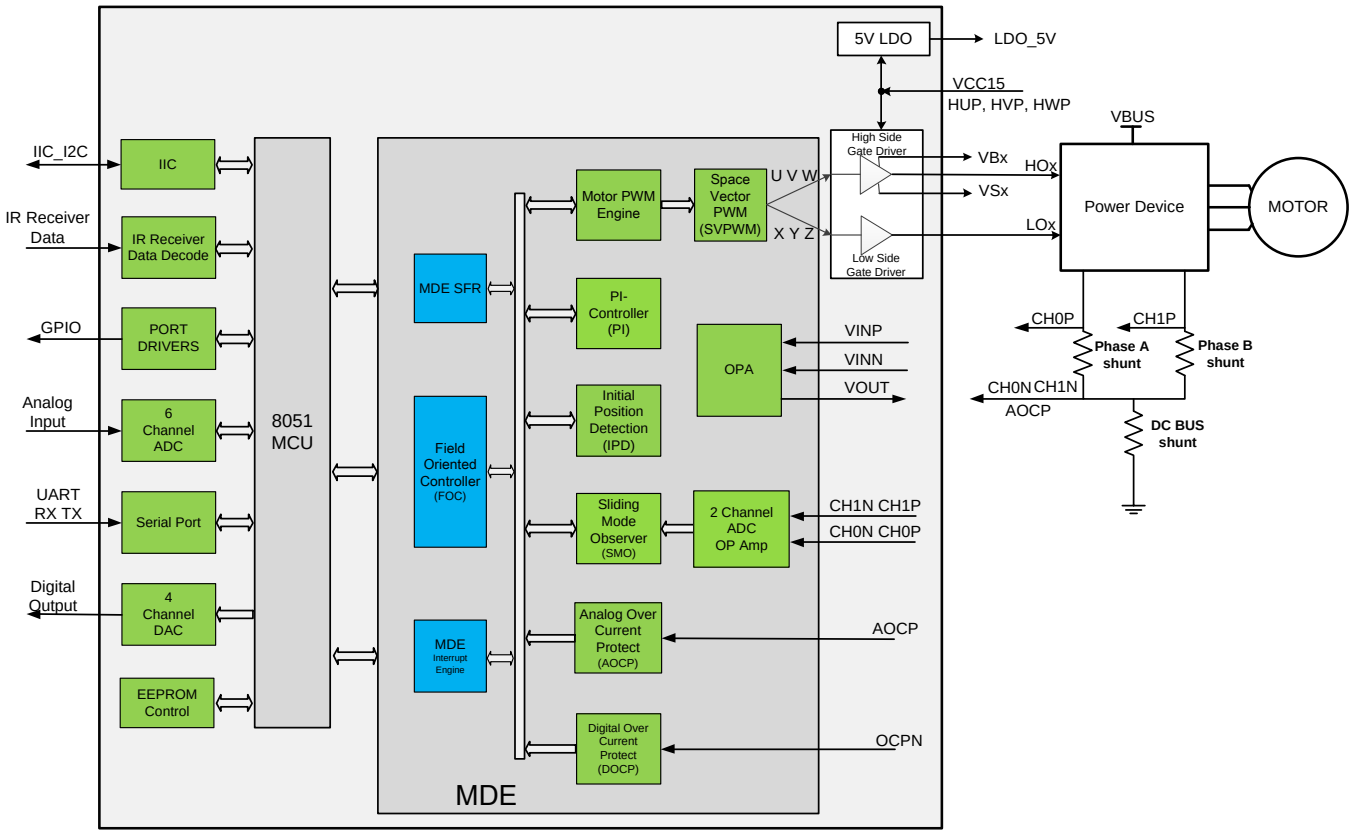

# 3. Pin Configurations

## 3.1. Package Instruction LQFP7x7- 48

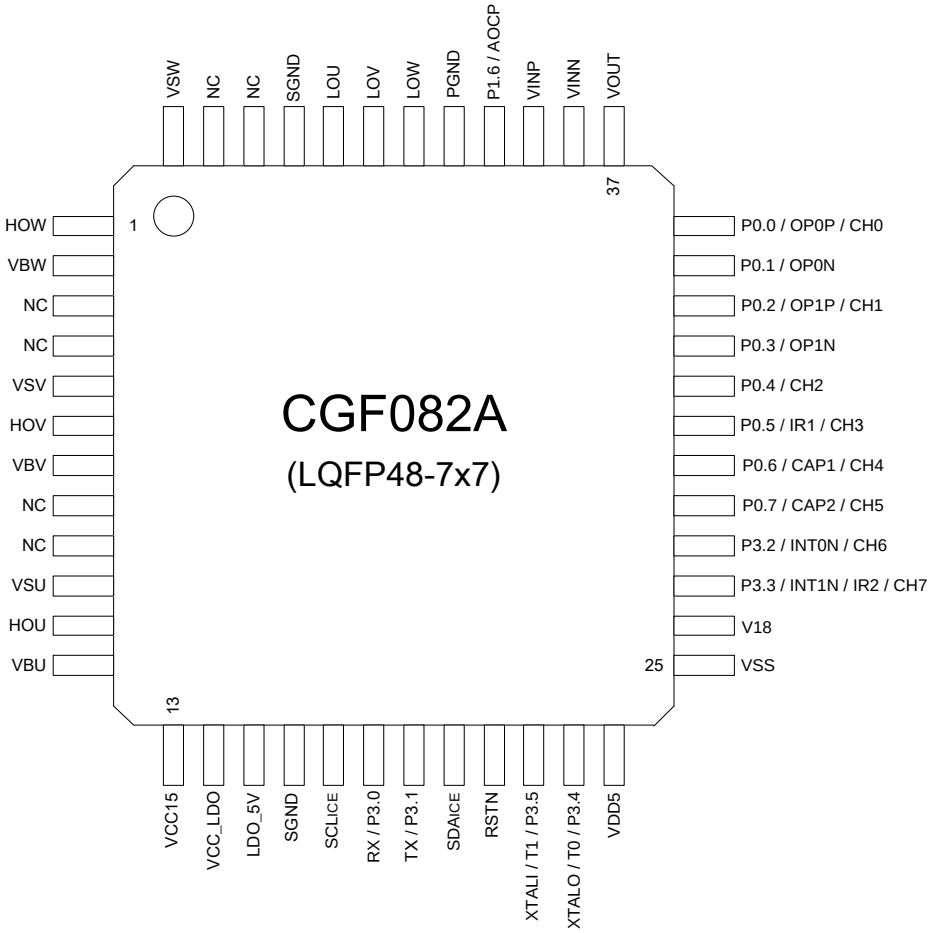

## 3.2. Pin Description

Table 3.1. Pin Description

| Pin # CGF082A LQFP-48 | Name | Type | Description |
|---|---|---|---|
| 10 | VSU | | High-side driver U-phase floating supply offset voltage |
| 11 | HOU | HV O | High-side driver U-phase gate driver output |
| 12 | VBU | | High-side driver U-phase floating supply |
| 5 | VSV | | High-side driver V-phase floating supply offset voltage |
| 6 | HOV | HV O | High-side driver V-phase gate driver output |
| 7 | VBV | | High-side driver V-phase floating supply |
| 48 | VSW | | High-side driver W-phase floating supply offset voltage |
| 1 | HOW | HV O | High-side driver W-phase gate driver output |
| 2 | VBW | | High-side driver W-phase floating supply |
| 13 | VCC15 | Power | Logic and low-side gate drivers power supply voltage |
| 14 | VCC_LDO | Power | LDO power supply voltage |
| 15 | LDO_5V | Power | 5V LDO output |
| 16 | SGND | Ground | Logic ground |
| 18 | P3.0 | I/O | Bit 0 of Port 3. |
| | RX | I | Serial Data Transmit (UART) |
| 19 | P3.1 | I/O | Bit 1 of Port 3. |
| | TX | O | Serial Data Receive (UART) |
| 28 | P3.2 | I/O | Bit 2 of Port 3. |
| | CH6 | I | Analog Input Ch6. |
| | INT0N | I | External Interrupt 0.<br>Low level trigger or falling edge trigger. |
| 27 | P3.3 | I/O | Bit 3 of Port 3. |
| | CH7 | I | Analog Input Ch7. |
| | IR2 | I | IR receiver signal input 2 |
| | INT1N | I | External Interrupt 1.<br>Low level trigger or falling edge trigger. |

| | | | |
|---|---|---|---|
| 23 | P3.4 | I/O | Bit 4 of Port 3. |
| | XTALO | O | Crystal output pin.<br>Connect the crystal 12MHz between this pin and XTALI and a 22pF capacitor to VSS. |
| | T0 | I | TIMER0 External Input. |
| 22 | P3.5 | I/O | Bit 5 of Port 3. |
| | XTALI | I | Crystal input pin.<br>Connect the crystal 12MHz between this pin and XTALO and a 22pF capacitor to VSS. |
| | T1 | I | TIMER1 External Input. |
| 24 | VDD5 | Power | 5.0V Voltage Input.<br>A 0.1uF and 10uF (minimum) capacitor should be connected between this pin and VSS. |
| 25 | VSS | Ground | Power Ground. |
| 26 | V18 | O | 1.8V Voltage Output.<br>A 0.1uF and 1uF (minimum) capacitor should be connected between this pin and VSS. |
| 29 | P0.7 | I/O | Bit 7 of Port 0. |
| | CH5 | I | Analog Input Ch5. |
| | CAP2 | I | Capture Input 2. |
| 30 | P0.6 | I/O | Bit 6 of Port 0. |
| | CH4 | I | Analog Input Ch4. |
| | CAP1 | I | Capture Input 1 |
| 31 | P0.5 | I/O | Bit 5 of Port 0. |
| | CH3 | I | Analog Input Ch3. |
| | IR1 | I | IR receiver signal input 1 |
| 32 | P0.4 | I/O | Bit 2 of Port 0. |
| | CH2 | I | Analog Input Ch2. |
| 33 | P0.3 | I/O | Bit 2 of Port 0. |
| | OP1N | I | OP 1-Amp N-Input. |
| 34 | P0.2 | I/O | Bit 3 of Port 0. |
| | CH1 | I | Analog Input Ch1. (Current feedback) |
| | OP1P | 0 | OP 1-Amp P- Input |
| 35 | P0.1 | I/O | Bit 0 of Port 0. |
| | OP0N | I | OP 0-Amp N- Input. |
| 36 | P0.0 | I/O | Bit 1 of Port 0. |
| | CH0 | I | Analog Input Ch0. (Current feedback) |
| | OP0P | I | OP 0-Amp P-Input. |

| | | | |
|---|---|---|---|
| 37 | VOUT | O | OPA output |
| 38 | VINN | I | OPA N-Input |
| 39 | VINP | I | OPA P-Input |
| 40 | P1.6 | I/O | Bit 6 of Port 1. |
| | AOCP | I | Analog OCP Control. |
| 21 | RSTN | I | System Reset. |
| 20 | $SDA_{ICE}$ | | For ICE. |
| 17 | $SCL_{ICE}$ | | For ICE. |
| 41 | PGND | Ground | Low-side gate drivers ground |
| 45 | SGND | Ground | Logic ground |
| 44 | LOU | O | Low-side gate driver U-phase output |
| 43 | LOV | O | Low-side gate driver V-phase output |
| 42 | LOW | O | Low-side gate driver W-phase output |

# 4. Absolute Maximum Ratings

| Item | Min. | Typ. | Max. |
|---|---|---|---|
| VDD5 Supply Voltage | $V_{SS}$-0.3V | | $V_{SS}$+6.0V |
| VDD5 Input Voltage | $V_{SS}$-0.3V | | $V_{DD}$+0.3V |
| VCC15 Supply Voltage | -0.3V | | 20V |
| VB High Side floating supply Voltage | -0.3V | | 600V |
| VS High Side offset Voltage | VB-18V | | VB+0.3V |
| VHO High Side gate-driver output Voltage | VS-0.3V | | VS+0.3V |
| VLO Low Side gate-driver output Voltage | PGND-0.3V | | VCC15+0.3V |
| Storage Temperature | -50℃ | | 150℃ |
| Operating Temperature | -20℃ | | 105℃ |
| $I_{OH}$ Total | | -80mA | |
| $I_{OL}$ Total | | 80mA | |
| Total Power Dissipation | | 500mW | |
| Electrostatic Discharge Capability – Human Body Mode | | TBD (KV) | |
| Electrostatic Discharge Capability – Machine Mode | | TBD (V) | |

## 5. D.C. Characteristics

Ta=25℃

| Symbol | Parameter | Test Conditions | | Min. | Typ. | Max. | Unit |
|---|---|---|---|---|---|---|---|
| | | $V_{DD}$ | Conditions | | | | |
| Vcc15 | Low side supply voltage | — | — | 11 | — | 18 | |
| LDO-5V Voltage | LDO-5V Output Range | — | VCC = 12V | 4.5 | 5 | 5.5 | V |
| LDO-5V Current | LDO-5V Current Range | — | VCC = 12V | — | 20 | 30 | mA |
| VB (U.V.W) | High side floating supply voltage | — | — | -8 | — | 600 | V |
| VS (U.V.W) | High side offset voltage | — | — | VB-18 | — | VB-11 | V |
| VHO (U.V.W) | High side gate driver output voltage | | | VS | | VB | V |
| VLO (U.V.W) | Low side gate driver output voltage | | | PGND | | VCC | V |
| $V_{DD5}$ | Operating Voltage | — | $f_{sys}$=48MHz | 4.5 | 5.0 | 5.5 | V |
| $V_{18}$ | $V_{18}$ Output Range | — | Load Current <30mA | 1.71 | 1.8 | 1.89 | V |
| $I_{DD}$ | Operating Current | VDD5 | No load, $f_{sys}$=48MHz,ADC off, MDE off | — | 9 | 12 | mA |
| $V_{IL}$ | Input Low Voltage for I/O Ports. | — | — | 0 | — | 0.3 $V_{DD5}$ | V |
| $V_{IH}$ | Input High Voltage for I/O Ports. | — | — | 0.75 $V_{DD5}$ | — | $V_{DD5}$ | V |
| $V_{LVD}$ | LVD Voltage Level | — | — | | | | |
| $V_{OL}$ | Output Low Voltage for I/O Ports. | VDD5 | $I_{OL}$=20mA | — | — | 0.5 | V |
| $V_{OH}$ | Output High Voltage for I/O Ports. | VDD5 | $I_{OH}$=-7.4mA | 4.5 | — | — | V |
| $R_{PU}$ | Pull-up Resistance for I/O Ports | VDD5 | — | 10 | 30 | 50 | KΩ |
| $R_{PD}$ | Pull-down Resistance for I/O Ports | VDD5 | — | 10 | 30 | 50 | KΩ |

## 6. A.C. Characteristics

Ta=25℃

| Symbol | Parameter | Test Conditions | | Min. | Typ. | Max. | Unit |
|---|---|---|---|---|---|---|---|
| | | VDD5 | Conditions | | | | |
| $f_{sys}$ | System Frequency | 4.5V~5.5V | Ta=-40℃ to 125℃ | TBD | 48.0 | TBD | MHz |
| | | | Ta=-20℃ to 85℃ | TBD | 48.0 | TBD | MHz |
| | | | Ta=25℃ | -1% | 48.0 | +1% | MHz |
| $f_{TIMER}$ | Timer Input Pin Frequency | — | — | — | — | 4 | $f_{sys}$ |
| $t_{INT}$ | Interrupt Pulse Width | — | — | 1 | 5 | 10 | $t_{sys}$ |
| $t_{LVD}$ | Low Voltage Width to interrupt | — | — | 120 | 240 | 480 | us |
| $t_{V18}$ | V18 Stable Time | — | — | 60 | 120 | 240 | us |
| $t_{RSDT}$ | System Reset Delay Time(Power On Reset) | — | — | 25 | 50 | 100 | ms |

## 7. OPA Characteristics

Ta=25℃, $V_{DD}$= 5V, $V_{SS}$=GND

| Symbol | Parameter | Conditions | Min. | Typ. | Max. | Unit |
|---|---|---|---|---|---|---|
| $V_{CRM}$ | Common Mode Input Range | | $V_{SS}$-0.3 | — | $V_{DD}$+0.3 | V |
| $V_{OS}$ | Input Offset Voltage | $V_{CM}$=$V_{SS}$ | -4.5 | | 4.5 | mV |
| $A_{OL}$ | DC Open-Loop Gain | $V_{OUT}$=0.3V~$V_{DD}$-0.3V<br>$V_{CM}$=$V_{SS}$ | 88 | 112 | | dB |
| GBWP | Gain Bandwidth Product | $R_L$=10KΩ<br>$C_L$=60 pF | | 1 | | MHz |
| SR | Slew Rate | $C_L$=60 pF | | 0.6 | | V/us |

Note: OPA default is power down. If you want to use OPA, you need to set the OPAPD control bit to "0" first. (see Table25.10.1 AOCPCONT SFR bit[5])

## 8. A/D Converter Characteristics

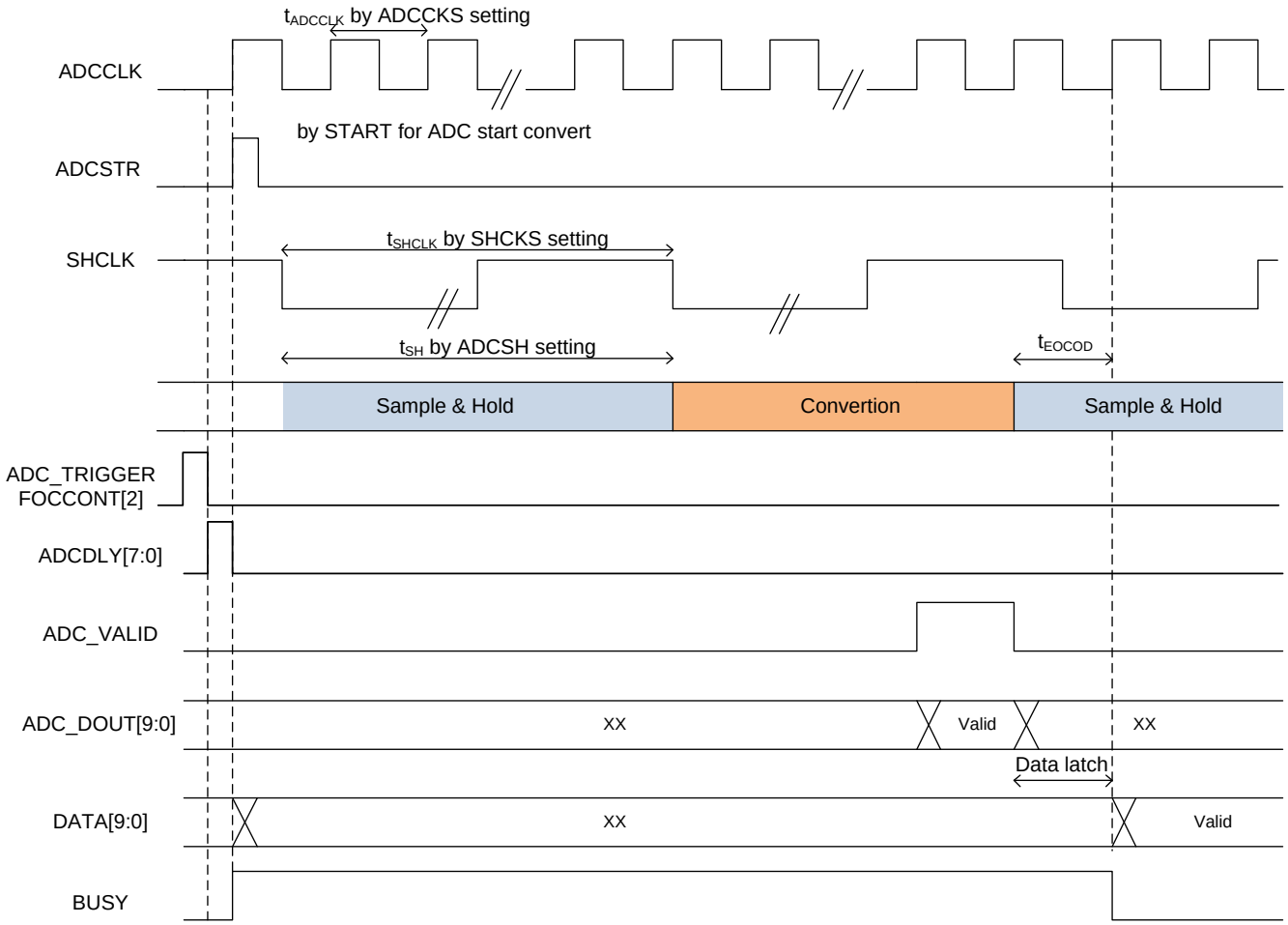

| Symbol | Parameter | Test Conditions | | Min. | Typ. | Max. | Unit |
|---|---|---|---|---|---|---|---|
| | | VDD5 | Conditions | | | | |
| $R_I$ | Input Impedance | — | — | — | | — | MΩ |
| $I_{AD}$ | Additional Power Consumption if A/D Converter is Used | 5V | — | — | 6 | — | mA |
| $I_{ADSTB}$ | A/D Converter Standby Current | — | Load Current < 10mA | — | — | 4 | uA |
| $t_{ADCCLK}$ | A/D Converter Clock Time | — | 24MHz | — | 41.7 | — | ns |
| | | — | 12MHz | — | 83.3 | — | ns |
| $t_{CONV}$ | A/D Conversion Time | — | 24MHz | — | 0.875 | — | us |
| | | — | 12MHz | — | 1.7 | — | us |
| $t_{SH}$ | A/D Sample and Hold Time | — | 6MHz | 0.17 | — | 0.68 | us |
| | | — | 3MHz | 0.34 | — | 1.36 | us |
| | | — | 2.4MHz | 0.42 | — | 1.68 | us |
| | | — | 2MHz | 0.5 | — | 2 | us |
| DNL | Differential Non-linearity | 4.5V | No load, $t_{CONV}$=2.5us | -1 | — | +3 | LSB |
| | | 5.5V | | -1 | — | +3 | LSB |
| | | 4.5V | No load, $t_{CONV}$=5us | -1 | — | +3 | LSB |
| | | 5.5V | | -1 | — | +3 | LSB |
| INL | Integral Non-linearity | 4.5V | No load, $t_{CONV}$=2.5us | -4 | — | +4 | LSB |
| | | 5.5V | | -4 | — | +4 | LSB |
| | | 4.5V | No load, $t_{CONV}$=5us | -4 | — | +4 | LSB |
| | | 5.5V | | -4 | — | +4 | LSB |
| $G_{ERR}$ | Gain Error | — | — | -10 | — | +10 | LSB |
| $t_{EOCOD}$ | End of Conversion Output Delay | 5V | — | — | | — | ns |

# 9. Special Function Registers (SFR)

### SFRs Memory Map

| | 8 | 9 | A | B | C | D | E | F | |
|---|---|---|---|---|---|---|---|---|---|
| F8 | PINCONG1 | PINCONG2 | PINCONG3 | PINCONG4 | PINCONG5 | PINCONG6 | RSTS | TAKEY | FF |
| F0 | B | PINSET1 | PINSET2 | PINSET3 | PINSET4 | PINSET5 | PINSET6 | PINSET7 | F7 |
| E8 | IICS | IICCTL | IICA1 | IICA2 | SFR_PAGE | SP_CYC | AOCPCONT | OCPNCONT | EF |
| E0 | ACC | MPWMDATL | MPWMDATH | MPWMCONT1 | MPWMINV | MPWMDT | PI_GAIN | MPWMCONT2 | E7 |
| D8 | VDCCONT | CAPT_L | CAPT_H | CAPH_L | CAPH_H | CAPCONT | PI_KT_L | PI_KT_H | DF |
| D0 | PSW | PFCON | ----- | ----- | FOC_D_L | FOC_D_H | FOCCONT | PI_TMSR | D7 |
| C8 | T2CON | ADCOS_L | ADCOS_H | ----- | ----- | ----- | ----- | ----- | CF |
| C0 | IRCON1 | ADCSTR | ADCCONT | ADCD1 | ADCD2 | ADCDLY | ----- | PINCONG7 | C7 |
| B8 | IEN1 | IP1 | IICRWD | SMO_D1_L | SMO_D1_H | SMO_D2_L | SMO_D2_H | MPWMCPSF | BF |
| B0 | P3 | ----- | PI_MIN_LMT_L | PI_MIN_LMT_H | TL2 | TH2 | WDTC | WDTK | B7 |
| A8 | IEN0 | IP0 | PI_TR_L | PI_TR_H | PI_OUT_L | PI_OUT_H | PI_FB_L | PI_FB_H | AF |
| A0 | P2 | GEN_LPF_L | GEN_LPF_H | EEPROM | INI_ANG_DAT | INI_ANG_CTRL | PI_CMD_L | PI_CMD_H | A7 |
| 98 | SCON | SBUF | SRELL | SRELH | IICEBT | PI_UI_L | PI_UI_H | MOTOR_CONT2 | 9F |
| 90 | P1 | PI_KI_L | PI_KI_H | PI_KP_L | PI_KP_H | PI_MAX_LMT_L | PI_MAX_LMT_H | MOTOR_CONT1 | 97 |
| 88 | TCON | TMOD | TL0 | TL1 | TH0 | TH1 | AUX | SYNC | 8F |
| 80 | P0 | SP | DP0L | DP0H | DP1L | DP1H | RCON | PCON | 87 |
| | 0 | 1 | 2 | 3 | 4 | 5 | 6 | 7 | |

| SYMBOL | DIRECT ADDRESS | | SFR_PAGE | | | | | | |
|---|---|---|---|---|---|---|---|---|---|
| | [L,H] | | 0 | 1 | 2 | 3 | 4 | 5 | 6 |
| **MPWM** | | | | | | | | | |
| MPWMDAT [L,H] | E1H | E2H | CYCLE | DUTY_U | DUTY_V | DUTY_W | | | |
| **PI-Controller** | | | | | | | | | |
| PI_KI[L,H] | 91H | 92H | IQ_KI | ID_KI | SPD_KI | PLL_KI | USER_KI | | |
| PI_KP [L,H] | 93H | 94H | IQ_KP | ID_KP | SPD_KP | PLL_KP | USER_KP | | |
| PI_KT [L,H] | DEH | DFH | IQ_KT | ID_KT | SPD_KT | PLL_KT | USER_KT | | |
| PI_TR [L,H] | AAH | ABH | IQ_TR | ID_TR | SPD_TR | PLL_TR | | | |
| PI_MAX_LMT [L,H] | 95H | 96H | IQ_MAX | ID_MAX | SPD_MAX | PLL_MAX | USER_MAX | | |
| PI_MIN_LMT [L,H] | B2H | B3H | IQ_MIN | ID_MIN | SPD_MIN | PLL_MIN | USER_MIN | | |
| PI_CMD[L,H] | A6H | A7H | IQ_CMD | ID_CMD | SPD_CMD | PLL_CMD | USER_CMD | | |
| PI_UI [L,H] | 9DH | 9EH | IQ_UI | ID_UI | SPD-UI | PLL-UI | USER_UI | | |
| PI_OUT [L,H] | ACH | ADH | IQ_OUT | ID_OUT | SPD-OUT | PLL-OUT | USER_OUT | | |
| PI_FB [L,H] | AEH | AFH | IQ_FB | ID_FB | SPD-FB | PLL-FB | USER_FB | | |
| **Slide Mode Controller** | | | | | | | | | |
| SMO_D1 [L,H] | BBH | BCH | GS | SMO-gain | Angle base | Z-Correct | SMO-angle | BanBan-gain | |
| SMO_D2 [L,H] | BDH | BEH | FS | SMO-filter | ---- | MAXSMC-Err | SPEEDER | | |
| **Field Oriented Controller** | | | | | | | | | |
| FOC_D[L,H] | D4H | D5H | VQ_OFSET | VD_OFSET | | AS | CPU_ANG | FOC-angle | SVPWM-Amp |
| Independent General Low Pass Filter | | | | | | | | | |
| GEN_LPF[L,H] | A1H | A2H | LPF_GAIN | LPF_IN | LPF_OUT | LPF_PROUT | | | |
| ADC Offset Value | | | | | | | | | |

| | | | | | | | | | |
|---|---|---|---|---|---|---|---|---|---|
| ADCOS [L,H] | C9H | CAH | ADC1OS | ADC2OS | | | | | |
| Initial Angle Estimated Controller | | | | | | | | | |
| INI_ANG_CTRL | A4H | | Pattern 10 | Pattern 32 | Pattern 54 | | | | |
| EEPROM | | | | | | | | | |
| EEPROM | A3H | | EE_ADDR | EE_DATA | EE_CMD | | | | |
| CAPTURE | | | | | | | | | |
| CAPCONT | DDH | | E_CAPCONT | I_CAPCONT | | | | | |
| CAPT[L,H] | D9H | DAH | EXT_CAPT | INT_CAPT | | | | | |
| CAPH[L,H] | DBH | DCH | EXT_CAPH | INT_CAPH | | | | | |

## 10. CGF082A SFRs and Reset Value

| SYMBOL | DESCRIPTION | DIRECT ADDRESS | RESET VALUE |
|---|---|---|---|
| ACC | Accumulator | E0H | 00H |
| ADCSTR | ADC Start Convert and Setting Register | C1H | 00H |
| ADCCONT | ADC Control Register | C2H | 83H |
| ADCD1 | ADC Data Register 1 | C3H | 00H |
| ADCD2 | ADC Data Register 2 | C4H | 00H |
| ADCDLY | ADC Sample Delay | C5H | 33H |
| ADCOS_L | ADC Data Offset Low byte | C9H | 00H |
| ADCOS_H | ADC Data Offset High byte | CAH | 02H |
| AUX | Auxiliary | 8EH | 11H |
| AOCPCONT | Analog OCP Control Register | EEH | C7H |
| B | B Register | F0H | 00H |
| CAPCONT | Capture Control Register | DDH | 03H |
| CAPT_L | Capture Total Count Low | D9H | 00H |
| CAPT_H | Capture Total Count High | DAH | 00H |
| CAPH_L | Capture High-level Count Low | DBH | 00H |
| CAPH_H | Capture High-level Count High | DCH | 00H |
| DPTR0: | Data Pointer 0 (2 bytes) | DCH | FFH |
| DP0L | Data Pointer 0 Low | 82H | 00H |
| DP0H | Data Pointer 0 High | 83H | 00H |
| DPTR1 | Data Pointer 1 (2 bytes) | E7H | 00H |
| DP1L | Data Pointer 1 Low | 84H | 00H |
| DP1H | Data Pointer 1 High | 85H | 00H |
| EEPROM | D&Q -Axis Voltage Offset Low byte | A3H | 00H |
| FOCCONT | Field Oriented Control Register | D6H | 00H |
| FOC_D_L | Field Oriented Control Data Low byte | D4H | 00H |
| FOC_D_H | Field Oriented Control Data High byte | D5H | 00H |
| IEN0 | Interrupt Enable Register 0 | A8H | 00H |
| IEN1 | Interrupt Enable Register 1 | B8H | 00H |
| IP0 | Interrupt Priority Register 0 | A9H | 00H |
| IP1 | Interrupt Priority Register 1 | B9H | 00H |
| IRCON1 | Interrupt Request Register 1 | C0H | 00H |
| IICS | IIC Status Register | E8H | 00H |
| IICCTRL | IIC Control Register | E9H | 04H |
| IICA1 | IIC Address 1 Register | EAH | A0H |
| IICA2 | IIC Address 2 Register | EBH | 60H |
| IICRWD | IIC Read Write Register | BAH | 00H |
| IICEBT | IIC Enable Bus Transaction Register | 9CH | 00H |
| INI_ANG_DAT | Initial Angle Estimated Data Register | A4H | EBH |
| INI_ANG_CTRL | Initial Angle Estimated Control Register | A5H | 18H |
| MOTOR_CONT1 | Motor Control Register 1 | 97H | 00H |
| MOTOR_CONT2 | Motor Control Register 2 | 9FH | A4H |
| MPWMCONT1 | MPWM Control Register 1 | E3H | 00H |
| MPWMDATL | MPWM Data Low | E1H | 00H |
| MPWMDATH | MPWM Data High | E2H | 00H |
| MPWMDT | Motor PWM Dead-Time Register | E5H | 78H |
| MPWMINV | MPWM Inverse Selection Register | E4H | 00H |
| MPWMCONT2 | MPWM Control Register 2 | E7H | 00H |
| MPWMCPSF | Motor PWM Compensation Factor Register | BFH | 00H |
| OCPNCONT | OCP Control Register | EFH | 85H |
| P0 | Port 0 | 80H | FFH |
| P1 | Port 1 | 90H | FFH |
| P2 | Port 2 | A0H | FFH |
| P3 | Port 3 | B0H | FFH |

| | | | |
|---|---|---|---|
| PCON | Power Control Register | 87H | 00H |
| PSW | Program Status Word Register | D0H | 00H |
| PFCON | Peripheral Frequency Control Register | D1H | 00H |
| PINCONG1 | Pin Configure Register 1 | F8H | AAH |
| PINCONG2 | Pin Configure Register 2 | F9H | AAH |
| PINCONG3 | Pin Configure Register 3 | FAH | A0H |
| PINCONG4 | Pin Configure Register 4 | FBH | AAH |
| PINCONG5 | Pin Configure Register 5 | FCH | AAH |
| PINCONG6 | Pin Configure Register 6 | FDH | A0H |
| PINCONG7 | Pin Configure Register 7 | C7H | 0AH |
| PINSET1 | Pin I/O Setting Register 1 | F1H | AAH |
| PINSET2 | Pin I/O Setting Register 2 | F2H | AAH |
| PINSET3 | Pin I/O Setting Register 3 | F3H | 0AH |
| PINSET4 | Pin I/O Setting Register 4 | F4H | 00H |
| PINSET5 | Pin I/O Setting Register 5 | F5H | 80H |
| PINSET6 | Pin I/O Setting Register 6 | F6H | 0AH |
| PINSET7 | Pin I/O Setting Register 7 | F7H | B0H |
| PI_GAIN | PI Control  KPx16 Select Register | E6H | F7H |
| PI_KT_L | PI-control KT Data Low byte | DEH | 00H |
| PI_KT_H | PI-control KT Data High byte | DFH | 00H |
| PI_TMSR | PI-control Tracking Mode Select Register | D7H | 00H |
| PI_MIN_LMT_L | PI-control Minimal Limit Data Low byte | B2H | 01H |
| PI_MIN_LMT_H | PI-control Minimal Limit Data High byte | B3H | 80H |
| PI_TR_L | PI-control TR Data Low byte | AAH | 00H |
| PI_TR_H | PI-control TR Data High byte | ABH | 00H |
| PI_OUT_L | PI-control Output Data Low byte | ACH | 00H |
| PI_OUT_H | PI-control Output Data High byte | ADH | 00H |
| PI_FB_L | PI-control Feedback Data Low byte | AEH | 00H |
| PI_FB_H | PI-control Feedback Data High byte | AFH | 00H |
| PI_CMD_L | PI-control Command Data Low byte | A6H | 00H |
| PI_CMD_H | PI-control Command Data High byte | A7H | 00H |
| PI_UI_L | PI-control Integral Data Low byte | 9DH | 00H |
| PI_UI_H | PI-control Integral Data High byte | 9EH | 00H |
| PI_KI_L | PI-control KI Data Low byte | 91H | 00H |
| PI_KI_H | PI-control KI Data High byte | 92H | 00H |
| PI_KP_L | PI-control KP Data Low byte | 93H | 00H |
| PI_KP_H | PI-control KP Data High byte | 94H | 00H |
| PI_MAX_LMT_L | PI-control Minimal Limit Data Low byte | 95H | FFH |
| PI_MAX_LMT_H | PI-control Minimal Limit Data High byte | 96H | 7FH |
| RCON | Internal RAM Control Register | 86H | F0H |
| RSTS | Reset Source Register | FEH | 0AH |
| SFR_PAGE | Special Function Registers Page | ECH | 00H |
| SP_CYC | Speed Control Loop Cycle | EDH | 26H |
| SCON | Serial Port Control Register | 98H | 00H |
| SBUF | Serial Port Data Buffer | 99H | 00H |
| SRELL | Serial Port Reload Register High | 9AH | 00H |
| SRELH | Serial Port Reload Register High | 9BH | 00H |
| SP | Stack Pointer | 81H | 07H |
| SMO_D1_L | Sliding Mode Observer Data1 Low Byte | BBH | ---- |
| SMO_D1_H | Sliding Mode Observer Data1 High Byte | BCH | ---- |
| SMO_D2_L | Sliding Mode Observer Data2 Low Byte | BDH | 00H |
| SMO_D2_H | Sliding Mode Observer Data2 High Byte | BEH | 00H |
| SYNC | MOC Sync Register | 8FH | 00H |
| T2CON | Timer 2 Control Register | C8H | 00H |
| TAKEY | Time Access Key Register | FFH | 00H |
| TCON | Timer 0/1 Control Register | 88H | 00H |
| TH0 | Timer 0 High byte | 8CH | 00H |
| TH1 | Timer 1 High byte | 8DH | 00H |

| | | | |
|---|---|---|---|
| TH2 | Timer 2 High byte | B5H | 00H |
| TL0 | Timer 0 Low byte | 8AH | 00H |
| TL1 | Timer 1 Low byte | 8BH | 00H |
| TL2 | Timer 2 Low byte | B4H | 00H |
| TMOD | Timer 0/1 Mode Register | 89H | 00H |
| GEN_LPF_L | User Low Pass Filter Data Low byte | A1H | 00H |
| GEN_LPF _H | User Low Pass Filter Data High byte | A2H | 00H |
| WDTC | Watchdog Timer Control Register | B6H | 04H |
| WDTK | Watchdog Timer Refresh Key | B7H | 00H |

# 11. External Special Function Registers (XSFR)

**XSFRs Memory Map**

| | 8 | 9 | A | B | C | D | E | F | |
|---|---|---|---|---|---|---|---|---|---|
| 1078 | | | | | | | | | 107F |
| 1070 | ZALPHA_L | ZALPHA_H | ES_IALPHA_L | ES_IALPHA_H | ES_EALPHA_L | ES_EALPHA_H | | | 1077 |
| 1068 | ZBETA_L | ZBETA_H | ES_IBETA_L | ES_IBETA_H | ES_EBETA_L | ES_EBETA_H | | | 106F |
| 1060 | IA_L | IB_H | IALPHA_L | IALPHA_H | VALPHA_L | VALPHA_H | VA_L(R) | VA_H(R) | 1067 |
| 1058 | IB_L | IB_H | IBETA_L | IBETA_H | VBETA_L | VBETA_H | VB_L(R) | VB_H(R) | 105F |
| 1050 | | | | | | | | | 1057 |
| 1048 | | | | | | | | | 104F |
| 1040 | IR_DOUT0 | IR_DOUT1 | IR_DOUT2 | IR_DOUT3 | IR_DOUT4 | IR_DOUT5 | | | 1047 |
| 1038 | IR_DEC_SET | IR_DEC_CTRL | IR_HEADER_Z1_L | IR_HEADER_Z1_H | IR_HEADER_Z2_L | IR_HEADER_Z2_H | IR_STOP_Z_L | IR_STOP_Z_H | 103F |
| 1030 | MD_MODE | MD_CONT | MD0 | MD1 | MD2 | MD3 | MD4 | MD5 | 1037 |
| 1028 | SOFT_RST_KEY | SOFT_RST_EN | | | | | | | 102F |
| 1020 | IPWM_CYC_L | IPWM_CYC_H | IPWM_DUTY_L | IPWM_DUTY_H | IPWM_CTRL | | | FGCTRL | 1027 |
| 1018 | CRC_CTRL | CRC_DIN | CRC_DOUT_L | CRC_DOUT_H | CRC_STR_BANK | CRC_END_BANK | | | 101F |
| | 0 | 1 | 2 | 3 | 4 | 5 | 6 | 7 | |

# 12. CGF082A XSFRs and Reset Value

| SYMBOL | DESCRIPTION | DIRECT ADDRESS | RESET VALUE |
|---|---|---|---|
| CRC_CTRL | CRC Control Register | 1018H | 00H |
| CRC_DIN | CRC Input Data Register | 1019H | 00H |
| CRC_DOUT_L | CRC Output Remainder Data Register Low Byte | 101AH | 00H |
| CRC_DOUT_H | CRC Output Remainder Data Register High Byte | 101BH | 00H |
| CRC_STR_BANK | Start Bank Index for Flash Bank CRC Computation | 101CH | 00H |
| CRC_END_BANK | End Bank Index for Flash Bank CRC Computation | 101DH | 00H |
| FGCTRL | Function Generator Control Register | 1027H | 00H |
| IR_DOUT0 | IR Decode Output Data Byte0 | 1040H | 00H |
| IR_DOUT1 | IR Decode Output Data Byte1 | 1041H | 00H |
| IR_DOUT2 | IR Decode Output Data Byte2 | 1042H | 00H |
| IR_DOUT3 | IR Decode Output Data Byte3 | 1043H | 00H |
| IR_DOUT4 | IR Decode Output Data Byte4 | 1044H | 00H |
| IR_DOUT5 | IR Decode Output Data Byte5 | 1045H | 00H |
| IR_DEC_SET | IR Data Decode Setting Register | 1038H | 00H |
| IR_DEC_CTRL | IR Data Decode Control Register | 1039H | 00H |
| IR_HEADER_Z1_L | IR Data HEADER Zone1 Cycle Register Low Byte | 103AH | 80H |
| IR_HEADER_Z1_H | IR Data HEADER Zone1 Cycle Register High Byte | 103BH | BBH |
| IR_HEADER_Z2_L | IR Data HEADER Zone2 Cycle Register Low Byte | 103CH | 00H |
| IR_HEADER_Z2_H | IR Data HEADER Zone2 Cycle Register High Byte | 103DH | 7DH |
| IR_STOP_Z_L | IR Data STOP Zone Cycle Register Low Byte | 103EH | 80H |
| IR_STOP_Z_H | IR Data STOP Zone Cycle Register High Byte | 103FH | BBH |
| IPWM_CYC_L | Independent General PWM Cycle Low Byte | 1020H | 02H |
| IPWM_ CYC _H | Independent General PWM Cycle High Byte | 1021H | 00H |
| IPWM_DUTY_L | Independent General PWM Duty Low Byte | 1022H | FFH |
| IPWM_ DUTY _H | Independent General PWM Duty High Byte | 1023H | FFH |
| IPWM_CTRL | Independent General PWM Control Register | 1024H | 00H |

| | | | |
|---|---|---|---|
| MD_MODE | MDU Mode Control Register | 1030H | 10H |
| MD_CTRL | MDU Control Register | 1031H | 00H |
| MD0 | Multiplication Division Register 0 | 1032H | 00H |
| MD1 | Multiplication Division Register 1 | 1033H | 00H |
| MD2 | Multiplication Division Register 2 | 1034H | 00H |
| MD3 | Multiplication Division Register 3 | 1035H | 00H |
| MD4 | Multiplication Division Register 4 | 1036H | 00H |
| MD5 | Multiplication Division Register 5 | 1037H | 00H |
| SOFT_RST_KEY | Software Reset Key Register | 1028H | 00H |
| SOFT_RST_EN | Software Reset Enable Register | 1029H | 00H |
| | | | |
| ES_IALPHA_L(Read) | Estimate Current Iα Data Register Low Byte | 1072H | 00H |
| ES_IALPHA_H(Read) | Estimate Current Iα Data Register High Byte | 1073H | 00H |
| ES_EALPHA_L(Read) | Estimate EEMF Eα Data Register Low Byte | 1074H | 00H |
| ES_EALPHA_H(Read) | Estimate EEMF Eα Data Register High Byte | 1075H | 00H |
| ES_IBETA_L(Read) | Estimate Current Iβ Data Register Low Byte | 106AH | 00H |
| ES_IBETA_H(Read) | Estimate Current Iβ Data Register High Byte | 106BH | 00H |
| ES_EBETA_L(Read) | Estimate EEMF Eβ Data Register Low Byte | 106CH | 00H |
| ES_EBETA_H(Read) | Estimate EEMF Eβ Data Register High Byte | 106DH | 00H |
| IA_L(Read) | ADC Output of phase A current ( Ia ) Low Byte | 1060H | 00H |
| IA_H(Read) | ADC Output of phase A current ( Ia ) High Byte | 1061H | 00H |
| IALPHA_L(Read) | α-axis current (iα) Low Byte of CLARKE Transform | 1062H | 00H |
| IALPHA_H(Read) | α-axis current (iα) High Byte of CLARKE Transform | 1063H | 00H |
| IB_L(Read) | ADC Output of phase B current ( Ib ) Low Byte | 1058H | 00H |
| IB_H(Read) | ADC Output of phase B current ( Ib ) High Byte | 1059H | 00H |
| IBETA_L(Read) | β-axis current (iβ) Low Byte of CLARKE Transform | 105AH | 00H |
| IBETA_H(Read) | β-axis current (iβ) High Byte of CLARKE Transform | 105BH | 00H |
| VALPHA_L(Read) | α-axis Stator Voltage Data Register Low Byte | 1064H | 00H |
| VALPHA_H(Read) | α-axis Stator Voltage Data Register High Byte | 1065H | 00H |
| VA_L(Read) | Phase A Drive Voltage Data Register Low Byte | 1066H | 00H |
| VA_H(Read) | Phase A Drive Voltage Data Register High Byte | 1067H | 00H |
| VBETA_L(Read) | β-axis Stator Voltage Data Register Low Byte | 105CH | 00H |
| VBETA_H(Read) | β-axis Stator Voltage Data Register High Byte | 105DH | 00H |
| VB_L(Read) | Phase B Drive Voltage Data Register Low Byte | 105EH | 00H |
| VB_H(Read) | Phase B Drive Voltage Data Register High Byte | 105FH | 00H |
| ZALPHA_L(Read) | The Z gain of EEMF Eα Data Register Low Byte | 1070H | 00H |
| ZALPHA_H(Read) | The Z gain of EEMF Eα Data Register High Byte | 1071H | 00H |
| ZBETA_L(Read) | The Z gain of EEMF Eβ Data Register Low Byte | 1068H | 00H |
| ZBETA_H(Read) | The Z gain of EEMF Eβ Data Register High Byte | 1069H | 00H |

# 13. Memory

The **CGF082A** memory structure follows the general 8052 structure.
There are three memory areas: Program Memory (Flash), External Data Memory (XRAM) and Internal Data Memory (IRAM). In addition, **CGF082A** integrates 16Kbytes Flash, 256bytes IRAM and 512bytes XRAM.

## 13.1. Program Memory

The **CGF082A** contains 16Kbytes of on-chip Flash memory for program storage.

## 13.2. Data Memory

The **CGF082A** contains 256bytes of general internal data memory (IRAM) and 512 bytes of external data memory (XRAM).

### 13.2.1 Data Memory (IRAM)(00H~FFH)

The lower 128 bytes of IRAM may be accessed through both direct and indirect addressing. The upper 128 bytes of IRAM and the 128 bytes of SFR registers share the same address space. The upper 128 bytes of data memory may only be accessed using indirect addressing. The SFR registers can only be accessed through direct addressing. The lowest 32 bytes (00H -1FH) of data memory are grouped into 4 banks of 8 registers each. The **RS0** and **RS1** bits (**PSW**.3 and**PSW**.4) select which register bank is in use. Instructions using register addressing will only access the currently specified bank.

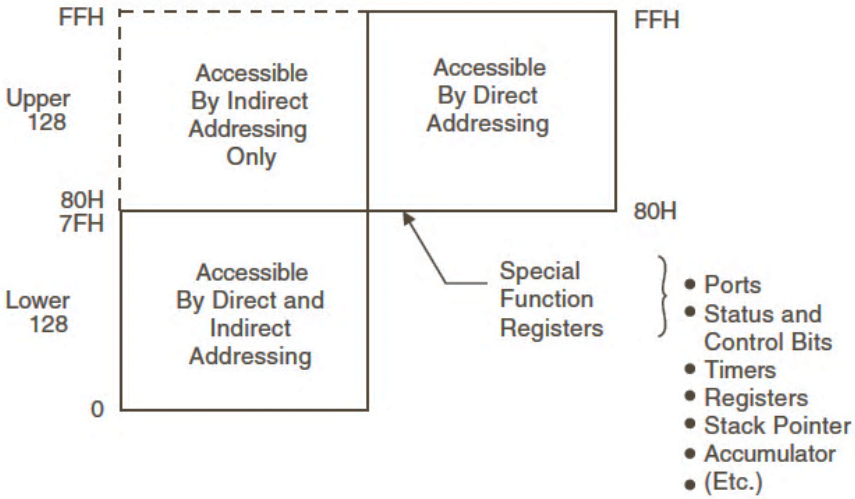


### 13.2.2 Data Memory (XRAM)(F000H~F1FFH)

External addresses F000H to F1FFh contain the on-chip expanded SRAM. This memory can be accessed via external direct addressing mode (with **MOVX** instructions). The address space of instruction **MOVX** @Ri,A (i=0,1) is determined by **RCON** [7:0] of SFR 86H **RCON**(internal RAM control register). The default setting of **RCON** [7:0] is F0h (page0). One page of XRAM is512 bytes.

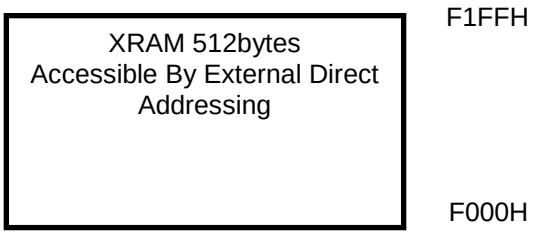

# 14. Instruction Set

The **CGF082A** is fully binary compatible with the MCS-51 instruction set.

| Arithmetic operations | Description | Bytes | Cycles | Hex Code |
|---|---|---|---|---|
| ADD A,Rn | Add register to accumulator | 1 | 1 | 0x28-0x2F |
| ADD A,direct | Add directly addressed data to accumulator | 2 | 2 | 0x25 |
| ADD A,@Ri | Add indirectly addressed data to accumulator | 1 | 2 | 0x26-0x27 |
| ADD A,#data | Add immediate data to accumulator | 2 | 2 | 0x24 |
| ADDC A,Rn | Add register to accumulator with carry | 1 | 1 | 0x38-0x3F |
| ADDC A,direct | Add directly addressed data to accumulator with carry | 2 | 2 | 0x35 |
| ADDC A,@Ri | Add indirectly addressed data to accumulator with carry | 1 | 2 | 0x36-0x37 |
| ADDC A,#data | Add immediate data to accumulator with carry | 2 | 2 | 0x34 |
| SUBB A,Rn | Subtract register from accumulator with borrow | 1 | 1 | 0x98-0x9F |
| SUBB A,direct | Subtract directly addressed data from accumulator with borrow | 2 | 2 | 0x95 |
| SUBB A,@Ri | Subtract indirectly addressed data from accumulator with borrow | 1 | 2 | 0x96-0x97 |
| SUBB A,#data | Subtract immediate data from accumulator with borrow | 2 | 2 | 0x94 |
| INC A | Increment accumulator | 1 | 1 | 0x04 |
| INC Rn | Increment register | 1 | 2 | 0x08-0x0F |
| INC direct | Increment directly addressed location | 2 | 3 | 0x05 |
| INC @Ri | Increment indirectly addressed location | 1 | 3 | 0x06-0x07 |
| INC DPTR | Increment data pointer | 1 | 1 | 0xA3 |
| DEC A | Decrement accumulator | 1 | 1 | 0x14 |
| DEC Rn | Decrement register | 1 | 2 | 0x18-0x1F |
| DEC direct | Decrement directly addressed location | 2 | 3 | 0x15 |
| DEC @Ri | Decrement indirectly addressed location | 1 | 3 | 0x16-0x17 |
| MUL AB | Multiply A and B | 1 | 5 | 0xA4 |
| DIV | Divide A by B | 1 | 5 | 0x84 |
| DA A | Decimally adjust accumulator | 1 | 1 | 0xD4 |

| Logic operations | Description | Bytes | Cycles | Hex Code |
|---|---|---|---|---|
| ANL A,Rn | AND register to accumulator | 1 | 1 | 0x58-0x5F |
| ANL A,direct | AND directly addressed data to accumulator | 2 | 2 | 0x55 |
| ANL A,@Ri | AND indirectly addressed data to accumulator | 1 | 2 | 0x56-0x57 |
| ANL A,#data | AND immediate data to accumulator | 2 | 2 | 0x54 |
| ANL direct,A | AND accumulator to directly addressed location | 2 | 3 | 0x52 |
| ANL direct,#data | AND immediate data to directly addressed location | 3 | 4 | 0x53 |
| ORL A,Rn | OR register to accumulator | 1 | 1 | 0x48-0x4F |
| ORL A,direct | OR directly addressed data to accumulator | 2 | 2 | 0x45 |
| ORL A,@Ri | OR indirectly addressed data to accumulator | 1 | 2 | 0x46-0x47 |
| ORL A,#data | OR immediate data to accumulator | 2 | 2 | 0x44 |
| ORL direct,A | OR accumulator to directly addressed location | 2 | 3 | 0x42 |
| ORL direct,#data | OR immediate data to directly addressed location | 3 | 4 | 0x43 |
| XRL A,Rn | Exclusive OR register to accumulator | 1 | 1 | 0x68-0x6F |
| XRL A,direct | Exclusive OR directly addressed data to accumulator | 2 | 2 | 0x65 |
| XRL A,@Ri | Exclusive OR indirectly addressed data to accumulator | 1 | 2 | 0x66-0x67 |
| XRL A,#data | Exclusive OR immediate data to accumulator | 2 | 2 | 0x64 |
| XRL direct,A | Exclusive OR accumulator to directly addressed location | 2 | 3 | 0x62 |
| XRL direct,#data | Exclusive OR immediate data to directly addressed location | 3 | 4 | 0x63 |
| CLR A | Clear accumulator | 1 | 1 | 0xE4 |
| CPL A | Complement accumulator | 1 | 1 | 0xF4 |
| RL A | Rotate accumulator left | 1 | 1 | 0x23 |
| RLC A | Rotate accumulator left through carry | 1 | 1 | 0x33 |
| RR A | Rotate accumulator right | 1 | 1 | 0x03 |
| RRC A | Rotate accumulator right through carry | 1 | 1 | 0x13 |
| SWAP A | Swap nibbles within the accumulator | 1 | 1 | 0xC4 |

| Data transfer operations | Description | Bytes | Cycles | Hex Code |
|---|---|---|---|---|
| MOV A,Rn | Move register to accumulator | 1 | 1 | 0xE8-0xEF |
| MOV A,direct | Move directly addressed data to accumulator | 2 | 2 | 0xE5 |
| MOV A,@Ri | Move indirectly addressed data to accumulator | 1 | 2 | 0xE6-0xE7 |
| MOV A,#data | Move immediate data to accumulator | 2 | 2 | 0x74 |
| MOV Rn,A | Move accumulator to register | 1 | 2 | 0xF8-0xFF |
| MOV Rn,direct | Move directly addressed data to register | 2 | 4 | 0xA8-0xAF |
| MOV Rn,#data | Move immediate data to register | 2 | 2 | 0x78-0x7F |
| MOV direct,A | Move accumulator to direct | 2 | 3 | 0xF5 |
| MOV direct,Rn | Move register to direct | 2 | 3 | 0x88-0x8F |
| MOV direct1,direct2 | Move directly addressed data to directly addressed location | 3 | 4 | 0x85 |
| MOV direct,@Ri | Move indirectly addressed data to directly addressed location | 2 | 4 | 0x86-0x87 |
| MOV direct,#data | Move immediate data to directly addressed location | 3 | 3 | 0x75 |
| MOV @Ri,A | Move accumulator to indirectly addressed location | 1 | 3 | 0xF6-0xF7 |
| MOV @Ri,direct | Move directly addressed data to indirectly addressed location | 2 | 5 | 0xA6-0xA7 |
| MOV @Ri,#data | Move immediate data to in directly addressed location | 2 | 3 | 0x76-0x77 |
| MOV DPTR,#data16 | Load data pointer with a 16-bit immediate | 3 | 3 | 0x90 |
| MOVC A,@A+DPTR | Load accumulator with a code byte relative to DPTR | 1 | 3 | 0x93 |
| MOVC A,@A+PC | Load accumulator with a code byte relative to PC | 1 | 3 | 0x83 |
| MOVX A,@Ri | Move external RAM (8-bit addr.) to accumulator | 1 | 3 | 0xE2-0xE3 |
| MOVX A,@DPTR | Move external RAM (16-bit addr.) to accumulator | 1 | 3 | 0xE0 |
| MOVX @Ri,A | Move accumulator to external RAM (8-bit addr.) | 1 | 4 | 0xF2-0xF3 |
| MOVX @DPTR,A | Move accumulator to external RAM (16-bit addr.) | 1 | 4 | 0xF0 |
| PUSH direct | Push directly addressed data onto stack | 2 | 4 | 0xC0 |
| POP direct | Pop directly addressed location from stack | 2 | 3 | 0xD0 |
| XCH A,Rn | Exchange register with accumulator | 1 | 2 | 0xC8-0xCF |
| XCH A,direct | Exchange directly addressed location with accumulator | 2 | 3 | 0xC5 |
| XCH A,@Ri | Exchange indirect RAM with accumulator | 1 | 3 | 0xC6-0xC7 |
| XCHD A,@Ri | Exchange low-order nibbles of indirect and accumulator | 1 | 3 | 0xD6-0xD7 |

| Program branches | Description | Bytes | Cycles | Hex Code |
|---|---|---|---|---|
| ACALL addr11 | Absolute subroutine call | 2 | 6 | xxx10001b |
| LCALL addr16 | Long subroutine call | 3 | 6 | 0x12 |
| RET | Return from subroutine | 1 | 4 | 0x22 |
| RETI | Return from interrupt | 1 | 4 | 0x32 |
| AJMP addr11 | Absolute jump | 2 | 3 | xxx00001b |
| LJMP addr16 | Long jump | 3 | 4 | 0x02 |
| SJMP rel | Short jump (relative address) | 2 | 3 | 0x80 |
| JMP @A+DPTR | Jump indirect relative to the DPTR | 1 | 2 | 0x73 |
| JZ rel | Jump if accumulator is zero | 2 | 3 | 0x60 |
| JNZ rel | Jump if accumulator is not zero | 2 | 3 | 0x70 |
| JC rel | Jump if carry flag is set | 2 | 3 | 0x40 |
| JNC | Jump if carry flag is not set | 2 | 3 | 0x50 |
| JB bit,rel | Jump if directly addressed bit is set | 3 | 4 | 0x20 |
| JNB bit,rel | Jump if directly addressed bit is not set | 3 | 4 | 0x30 |
| JBC bit,rel | Jump if directly addressed bit is set and clear bit | 3 | 4 | 0x10 |
| CJNE A,direct,rel | Compare directly addressed data to accumulator and jump if not equal | 3 | 4 | 0xB5 |
| CJNE A,#data,rel | Compare immediate data to accumulator and jump if not equal | 3 | 4 | 0xB4 |
| CJNE Rn,#data,rel | Compare immediate data to register and jump if not equal | 3 | 4 | 0xB8-0xBF |
| CJNE @Ri,#data,rel | Compare immed. to ind. and jump if not equal | 3 | 4 | 0xB6-0xB7 |
| DJNZ Rn,rel | Decrement register and jump if not zero | 2 | 3 | 0xD8-0xDF |
| DJNZ direct,rel | Decrement directly addressed location and jump if not zero | 3 | 4 | 0xD5 |
| NOP | No operation | 1 | 1 | 0 |

| Boolean manipulation | Description | Bytes | Cycles | Hex Code |
|---|---|---|---|---|
| CLR C | Clear carry flag | 1 | 1 | 0xC3 |
| CLR bit | Clear directly addressed bit | 2 | 3 | 0xC2 |
| SETB C | Set carry flag | 1 | 1 | 0xD3 |
| SETB bit | Set directly addressed bit | 2 | 3 | 0xD2 |
| CPL C | Complement carry flag | 1 | 1 | 0xB3 |
| CPL bit | Complement directly addressed bit | 2 | 3 | 0xB2 |
| ANL C,bit | AND directly addressed bit to carry flag | 2 | 2 | 0x82 |
| ANL C,/bit | AND complement of directly addressed bit to carry | 2 | 2 | 0xB0 |
| ORL C,bit | OR directly addressed bit to carry flag | 2 | 2 | 0x72 |
| ORL C,/bit | OR complement of directly addressed bit to carry | 2 | 2 | 0xA0 |
| MOV C,bit | Move directly addressed bit to carry flag | 2 | 2 | 0xA2 |
| MOV bit,C | Move carry flag to directly addressed bit | 2 | 3 | 0x92 |

# 15. MCU

## 15.1 8051 Engine

| SFR | Description | Address | Reset value |
|---|---|---|---|
| ACC | Accumulator | E0H | 00H |
| B | B Register | F0H | 00H |
| PSW | Program Status Word Register | D0H | 00H |
| SP | Stack Pointer | 81H | 07H |
| DP0H | Data Pointer 0 High | 83H | 00H |
| DP0L | Data Pointer 0 Low | 82H | 00H |
| DP1H | Data Pointer 1 High | 85H | 00H |
| DP1L | Data Pointer 1 Low | 84H | 00H |
| AUX | Auxiliary | 8EH | 11H |
| RCON | Internal RAM Control Register | 86H | F0H |

### 15.1.1 ACC (Accumulator)

The most important of all special function registers, that's the first comment about Accumulator which is also known as ACC or A. The Accumulator (sometimes referred to as Register A also) holds the result of most of arithmetic and logic operations.

| ACC<br>Accumulator | | | Address = E0H | | | Reset Value = 0x00H | | |
|---|---|---|---|---|---|---|---|---|
| Bit | ACC.7 | ACC.6 | ACC.5 | ACC.4 | ACC.3 | ACC.2 | ACC.1 | ACC.0 |
| | 7 | 6 | 5 | 4 | 3 | 2 | 1 | 0 |
| Type | R/W | R/W | R/W | R/W | R/W | R/W | R/W | R/W |

### 15.1.2 B (B Register)

The B register is used during multiplying and division instructions. It can also be used as a scratch-pad register to hold temporary data.

| B<br>B Register | | | Address = F0H | | | Reset Value = 0x00H | | |
|---|---|---|---|---|---|---|---|---|
| Bit | B.7 | B.6 | B.5 | B.4 | B.3 | B.2 | B.1 | B.0 |
| | 7 | 6 | 5 | 4 | 3 | 2 | 1 | 0 |
| Type | R/W | R/W | R/W | R/W | R/W | R/W | R/W | R/W |

### 15.1.3 PSW (Program Status Word Register)

The PSW register contains status bits that reflect the current state of the CPU. Note that the Parity bit can only be modified by hardware upon the state of ACC register.

| PSW<br>Program Status Word Register | Address = D0H | | | | | | Reset Value = 0x00H | |
|---|---|---|---|---|---|---|---|---|
| Bit | CY | AC | F0 | RS1 | RS0 | OV | F1 | P |
| | 7 | 6 | 5 | 4 | 3 | 2 | 1 | 0 |
| Type | R/W | R/W | R/W | R/W | R/W | R/W | R/W | R |

| | |
|---|---|
| CY | Carry flag :<br>Carry bit in arithmetic operations and accumulator for Boolean operations. |
| AC | Auxiliary Carry flag :<br>Set if there is a carry-out from third bit of Accumulator in BCD Operations. |
| F0 | General purpose Flag0 :<br>General purpose flag available for user. |
| RS1 | Register bank select control bit 1, used to select working register bank. |
| RS0 | Register bank select control bit 0, used to select working register bank. |
| OV | Overflow flag :<br>Set in case of overflow in Accumulator during arithmetic operations. |
| F1 | General purpose Flag 1 :<br>General purpose flag available for user. |
| P | Parity flag :<br>Reflects the number of ‘1’s in the Accumulator.<br>P = ‘1’ if Accumulator contains an odd number of ‘1’s<br>P = ‘0’ if Accumulator contains an even number of ‘1’s |

The state of RS1 and RS0 bits selects the working register bank as follows:

| RS1 | RS0 | Selected Register Bank | Location |
|---|---|---|---|
| 0 | 0 | Bank 0 | 00H – 07H |
| 0 | 1 | Bank 1 | 08H – 0FH |
| 1 | 0 | Bank 2 | 10H – 17H |
| 1 | 1 | Bank 3 | 18H – 1FH |

### 15.1.4 SP (Stack Pointer)

This register points to the top of stack in internal data memory space. It is used to store the return address of program before executing interrupt routine or subprograms. The SP is incremented before executing PUSH or CALL instruction and it is decremented after executing POP or RET(I) instruction (it always points the top of stack). A reset initializes the stack pointer to location 0x07. Therefore, the first value pushed on the stack is placed at location 0x08.

| SP<br>Stack Pointer | Address = 81H | | | | | Reset Value = 0x07H | | |
|---|---|---|---|---|---|---|---|---|
| Bit | SP.7 | SP.6 | SP.5 | SP.4 | SP.3 | SP.2 | SP.1 | SP.0 |
| | 7 | 6 | 5 | 4 | 3 | 2 | 1 | 0 |
| Type | R/W | R/W | R/W | R/W | R/W | R/W | R/W | R/W |

### 15.1.5 DP0 (Data Pointer 0)

These registers are intended to hold 16-bit address in the indirect addressing mode used by MOVX (move external memory), MOVC (move program memory) or JMP (computed branch) instructions. They may be manipulated as 16-bit register or as two separate 8-bit registers. DP0H holds higher byte and DP0L holds lower byte of indirect address.

It is generally used to access external code or data space, e.g.:

MOVCA,@A+DPTR (code space)

MOVA,@DPTR (data space)

| DP0L<br>Data Pointer 0 Low Byte | Address = 82H | | | | | Reset Value = 0x00H | | |
|---|---|---|---|---|---|---|---|---|
| Bit | DP0L[7:0] | | | | | | | |
| | 7 | 6 | 5 | 4 | 3 | 2 | 1 | 0 |
| Type | R/W | R/W | R/W | R/W | R/W | R/W | R/W | R/W |

| DP0H<br>Data Pointer 0 High Byte | Address = 83H | | | | | Reset Value = 0x00H | | |
|---|---|---|---|---|---|---|---|---|
| Bit | DP0H[7:0] | | | | | | | |
| | 7 | 6 | 5 | 4 | 3 | 2 | 1 | 0 |
| Type | R/W | R/W | R/W | R/W | R/W | R/W | R/W | R/W |

### 15.1.6 DP1 (Data Pointer 1)

The dual data pointer accelerates the movement of block data. The standard DPTR is a 16-bit register that is used to address external memory, or peripherals. The standard data pointer is called DPTR0 and the second data pointer is called DPTR1. The data pointer select bit chooses the active pointer. The data pointer select bit (DPS) is located in the LSB of AUX register (AUX.1).

The user switches between DPTR0 and DPTR1 by toggling the DPS bit. All DPTR-related instructions use the currently selected DPTR for any activity.

| DP1L | Address = 84H | | | | | Reset Value = 0x00H | | |
|---|---|---|---|---|---|---|---|---|
| Data Pointer 1Low Byte | | | | | | | | |
| Bit | DP1L[7:0] | | | | | | | |
| | 7 | 6 | 5 | 4 | 3 | 2 | 1 | 0 |
| Type | R/W | R/W | R/W | R/W | R/W | R/W | R/W | R/W |

| DP1H | Address = 85H | | | | | Reset Value = 0x00H | | |
|---|---|---|---|---|---|---|---|---|
| Data Pointer 1 High Byte | | | | | | | | |
| Bit | DP1H[7:0] | | | | | | | |
| | 7 | 6 | 5 | 4 | 3 | 2 | 1 | 0 |
| Type | R/W | R/W | R/W | R/W | R/W | R/W | R/W | R/W |

### 15.1.7 AUX(Auxiliary Register)

| AUX<br>Auxiliary Register | Address = 8EH | | | | | Reset Value = 0x11H | | |
|---|---|---|---|---|---|---|---|---|
| Bit | LVD_EN | LVD | ----- | ITS | SMOD | BRS | DPS | CP |
| | 7 | 6 | 5 | 4 | 3 | 2 | 1 | 0 |
| Type | R/W | R | X | R/W | R/W | R/W | R/W | R |

| | |
|---|---|
| LVD_EN | Low voltage detect enable :<br>1: Enable |
| LVD | Low voltage detect status. :<br>1:Low voltage occur |
| ITS | MCU instruction timing select. :<br>0:1T<br>1:2T |
| SMOD | Serial Port (UART) baud rate select. |
| BRS | Serial Port (UART) baud rate generator select. |
| DPS | Data pointer register select :<br>0 : Select DPTR Register DP0H, DP0L<br>1 : Select DPTR Register DP1H, DP1L |
| CP | Code protect :<br>0 : Non-protect<br>1: Protect |

### 15.1.8 RCON (Internal RAM Control Register)

256 bytes of on-chip expanded RAM are provided and can be accessed by external memory addressing method only (instruction MOVX). The address space of instruction MOVX @Ri,A (i= 0,1) is determined by RCON [7:0] of RCON. The default setting of RCON [7:0] is F0H.

| RCON<br>Internal RAM Control Register | Address = 86H | | | | | Reset Value = 0xF0H | | |
|---|---|---|---|---|---|---|---|---|
| Bit | RCON[7:0] | | | | | | | |
| | 7 | 6 | 5 | 4 | 3 | 2 | 1 | 0 |
| Type | R/W | R/W | R/W | R/W | R/W | R/W | R/W | R/W |

## 15.2 GPIO

Four I/O ports are available: Port0, Port1, Port2, and Port3.
All 32port pins on CGF082A can configure to one of four modes : quasi-bidirectional (standard 8051 port outputs),push-pull output, open drain output, or input-only. All port pins default to input-only mode after reset. Two configuration registers (PINSETx, PINCONFGx) for each port select the output mode for each port pin.

| SFR | Description | address | Reset value |
|---|---|---|---|
| P0 | Port 0 | 80H | FFH |
| P1 | Port 1 | 90H | FFH |
| P2 | Port 2 | A0H | FFH |
| P3 | Port 3 | B0H | FFH |
| PINCONG1 | Pin Configure Register 1 | F8H | AAH |
| PINCONG2 | Pin Configure Register 2 | F9H | AAH |
| PINCONG3 | Pin Configure Register 3 | FAH | A0H |
| PINCONG4 | Pin Configure Register 4 | FBH | AAH |
| PINCONG5 | Pin Configure Register 5 | FCH | AAH |
| PINCONG6 | Pin Configure Register 6 | FDH | A0H |
| PINCONG7 | Pin Configure Register 7 | C7H | 0AH |
| PINSET1 | Pin I/O Setting Register 1 | F1H | AAH |
| PINSET2 | Pin I/O Setting Register 2 | F2H | AAH |
| PINSET3 | Pin I/O Setting Register 3 | F3H | 0AH |
| PINSET4 | Pin I/O Setting Register 4 | F4H | 00H |
| PINSET5 | Pin I/O Setting Register 5 | F5H | 80H |
| PINSET6 | Pin I/O Setting Register 6 | F6H | 0AH |
| PINSET7 | Pin I/O Setting Register 7 | F7H | B0H |

### 15.2.1 Port

| P0 Port 0 | Address = 80H | | | | | Reset Value = 0XFFH | | |
|---|---|---|---|---|---|---|---|---|
| Bit | ----- | P0.6 | P0.5 | P0.4 | P0.3 | P0.2 | P0.1 | P0.0 |
| | 7 | 6 | 5 | 4 | 3 | 2 | 1 | 0 |
| Type | X | R/W | R/W | R/W | R/W | R/W | R/W | R/W |

| P1 Port 1 | Address = 90H | | | | | Reset Value = 0XFFH | | |
|---|---|---|---|---|---|---|---|---|
| Bit | ----- | P1.6 | P1.5 | P1.4 | P1.3 | P1.2 | P1.1 | P1.0 |
| | 7 | 6 | 5 | 4 | 3 | 2 | 1 | 0 |
| Type | X | R/W | R/W | R/W | R/W | R/W | R/W | R/W |

| P2 Port 2 | Address = A0H | | | | | Reset Value = 0XFFH | | |
|---|---|---|---|---|---|---|---|---|
| Bit | P2.7 | P2.6 | P2.5 | P2.4 | P2.3 | ----- | ----- | ----- |
| | 7 | 6 | 5 | 4 | 3 | 2 | 1 | 0 |
| Type | R/W | R/W | R/W | R/W | R/W | X | X | X |

| P3 Port 3 | Address = B0H | | | | | Reset Value = 0XFFH | | |
|---|---|---|---|---|---|---|---|---|
| Bit | ----- | ----- | P3.5 | P3.4 | P3.3 | P3.2 | P3.1 | P3.0 |
| | 7 | 6 | 5 | 4 | 3 | 2 | 1 | 0 |
| Type | X | X | R/W | R/W | R/W | R/W | R/W | R/W |

### 15.2.2 PINCONG (Pin Configure Register)

PINCONG1 Address = F8H Reset Value = 0xAAH

Pin Configure Register 1

| Bit | CH4CONG[1:0] | | CH5CONG[1:0] | | CH6CONG[1:0] | | CH7CONG[1:0] | |
|---|---|---|---|---|---|---|---|---|
| | 7 | 6 | 5 | 4 | 3 | 2 | 1 | 0 |
| Type | R/W | R/W | R/W | R/W | R/W | R/W | R/W | R/W |

00 : Quasi-bidirectional(standard 8051 port outputs)

01 : Push-pull output

10 : Input-only (High impedance)

11 : Open drain output

PINCONG2 Address = F9H Reset Value = 0xAAH

Pin Configure Register 2

| Bit | CH0P CONG[1:0] | | CH1P CONG[1:0] | | CH2CONG[1:0] | | CH3CONG[1:0] | |
|---|---|---|---|---|---|---|---|---|
| | 7 | 6 | 5 | 4 | 3 | 2 | 1 | 0 |
| Type | R/W | R/W | R/W | R/W | R/W | R/W | R/W | R/W |

00 : Quasi-bidirectional(standard 8051 port outputs)

01 : Push-pull output

10 : Input-only (High impedance)

11 : Open drain output

PINCONG3 Address = FAH Reset Value = 0xA0H

Pin Configure Register 3

| Bit | XCONG[1:0] | | UCONG[1:0] | | XTALO CONG[1:0] | | XTALI CONG[1:0] | |
|---|---|---|---|---|---|---|---|---|
| | 7 | 6 | 5 | 4 | 3 | 2 | 1 | 0 |
| Type | R/W | R/W | R/W | R/W | R/W | R/W | R/W | R/W |

00 : Quasi-bidirectional(standard 8051 port outputs)

01 : Push-pull output

10 : Input-only (High impedance)

11 : Open drain output

PINCONG4 Address = FBH Reset Value = 0xAAH

Pin Configure Register 4

| Bit | ZCONG[1:0] | | WCONG[1:0] | | YCONG[1:0] | | VCONG[1:0] | |
|---|---|---|---|---|---|---|---|---|
| | 7 | 6 | 5 | 4 | 3 | 2 | 1 | 0 |
| Type | R/W | R/W | R/W | R/W | R/W | R/W | R/W | R/W |

00 : Quasi-bidirectional(standard 8051 port outputs)

01 : Push-pull output

10 : Input-only (High impedance)

11 : Open drain output

PINCONG5 Address = FCH Reset Value = 0xAAH

Pin Configure Register 5

| Bit | OCPNCONG[1:0] | | CH1N CONG[1:0] | | CH0N CONG [1:0] | | AOCPCONG [1:0] | |
|---|---|---|---|---|---|---|---|---|
| | 7 | 6 | 5 | 4 | 3 | 2 | 1 | 0 |
| Ty | R/W | R/W | R/W | R/W | R/W | R/W | R/W | R/W |

00 : Quasi-bidirectional(standard 8051 port outputs)

01 : Push-pull output

10 : Input-only (High impedance)

11 : Open drain output

PINCONG6 Address = FDH Reset Value = 0xA0H

Pin Configure Register 6

| Bit | IIC_SCLCONG [1:0] | | IIC_SDACONG [1:0] | | RXCONG[1:0] | | TXCONG[1:0] | |
|---|---|---|---|---|---|---|---|---|
| | 7 | 6 | 5 | 4 | 3 | 2 | 1 | 0 |
| Type | R/W | R/W | R/W | R/W | R/W | R/W | R/W | R/W |

00 : Quasi-bidirectional(standard 8051 port outputs)

01 : Push-pull output

10 : Input-only (High impedance)

11 : Open drain output

PINCONG7 Address = C7H Reset Value = 0x0AH

Pin Configure Register 7

| Bit | ----- | | ----- | | FGCONG [1:0] | | IPWMCONG [1:0] | |
|---|---|---|---|---|---|---|---|---|
| | 7 | 6 | 5 | 4 | 3 | 2 | 1 | 0 |
| Type | X | X | R/W | R/W | R/W | R/W | R/W | R/W |

00 : Quasi-bidirectional(standard 8051 port outputs)

01 : Push-pull output

10 : Input-only (High impedance)

11 : Open drain output

### 15.2.3 PINSET (Pin I/O Setting Register)

PINSET1 Address = F1H Reset Value = 0xAAH

Pin I/O Setting Register 1

| Bit | CH4SET[1:0] | | CH5SET[1:0] | | CH6SET[1:0] | | CH7SET[1:0] | |
|---|---|---|---|---|---|---|---|---|
| | 7 | 6 | 5 | 4 | 3 | 2 | 1 | 0 |
| Type | R/W | R/W | R/W | R/W | R/W | R/W | R/W | R/W |

00 : No pull

01 : Pull down

10 : Pull up

11 : No pull

PINSET2 Address = F2H Reset Value = 0xAAH

Pin I/O Setting Register 2

| Bit | CH0PSET[1:0] | | CH1P SET[1:0] | | CH2SET[1:0] | | CH3SET[1:0] | |
|---|---|---|---|---|---|---|---|---|
| | 7 | 6 | 5 | 4 | 3 | 2 | 1 | 0 |
| Type | R/W | R/W | R/W | R/W | R/W | R/W | R/W | R/W |

00 : No pull

01 : Pull down

10 : Pull up

11 : No pull

PINSET3 Address = F3H Reset Value = 0x0AH

Pin I/O Setting Register 3

| Bit | XSET[1:0] | | USET[1:0] | | XTALO SET[1:0] | | XTALI SET[1:0] | |
|---|---|---|---|---|---|---|---|---|
| | 7 | 6 | 5 | 4 | 3 | 2 | 1 | 0 |
| Type | R/W | R/W | R/W | R/W | R/W | R/W | R/W | R/W |

00 : No pull

01 : Pull down

10 : Pull up

11 : No pull

PINSET4 Address = F4H Reset Value = 0x00H

Pin I/O Setting Register 4

| Bit | ZSET[1:0] | | WSET[1:0] | | YSET[1:0] | | VSET[1:0] | |
|---|---|---|---|---|---|---|---|---|
| | 7 | 6 | 5 | 4 | 3 | 2 | 1 | 0 |
| Type | R/W | R/W | R/W | R/W | R/W | R/W | R/W | R/W |

00 : No pull

01 : Pull down

10 : Pull up

11 : No pull

PINSET5 Address = F5H Reset Value = 0x80H

Pin I/O Setting Register 5

| Bit | OCPNSET[1:0] | | CH1N SET[1:0] | | CH0N SET [1:0] | | AOCPSET[1:0] | |
|---|---|---|---|---|---|---|---|---|
| | 7 | 6 | 5 | 4 | 3 | 2 | 1 | 0 |
| Type | R/W | R/W | R/W | R/W | R/W | R/W | R/W | R/W |

00 : No pull

01 : Pull down

10 : Pull up

11 : No pull

PINSET6 Address = F6H Reset Value = 0x0AH

Pin I/O Setting Register 6

| Bit | IIC_SCLSET[1:0] | | IIC_SDASET[1:0] | | RXSET[1:0] | | TXSET [1:0] | |
|---|---|---|---|---|---|---|---|---|
| | 7 | 6 | 5 | 4 | 3 | 2 | 1 | 0 |
| Type | R/W | R/W | R/W | R/W | R/W | R/W | R/W | R/W |

00 : No pull

01 : Pull down

10 : Pull up

11 : No pull

PINSET7 Address = F7H Reset Value = 0xB0H

Pin I/O Setting Register 7

| Bit | MDES | ---- | DOCPNDBT[1:0] | | FGSET4[1:0] | | IPWMSET[1:0] | |
|---|---|---|---|---|---|---|---|---|
| | 7 | 6 | 5 | 4 | 3 | 2 | 1 | 0 |
| Type | R/W | R/W | R/W | R/W | R/W | R/W | R/W | R/W |

MDES

0 : U、V、W、X、Y、Z is GPIO Mode.

1: U、V、W、X、Y、Z is SVPWM Mode.( ADC CH0 & CH1 Auto Converter)

MDES=1, Pin set must to Push-pull output mode. (PINCONG3 [7:4] and PINCONG4 [7:0])

DOCPNDBT ( De-bounce time for digital OCPN)

00 : 0nS

01 : 250nS

10 : 500nS

11 : 1000nS

## 15.3 Clock Structure

The clock source of the device may be either external, or internal. The external crystal (12MHz) is connect to pins XTALI and XTALO. The internal clock source (on-chip oscillator) is run at 2MHz. The choice of internal, or external, clock source is setting by Writer.

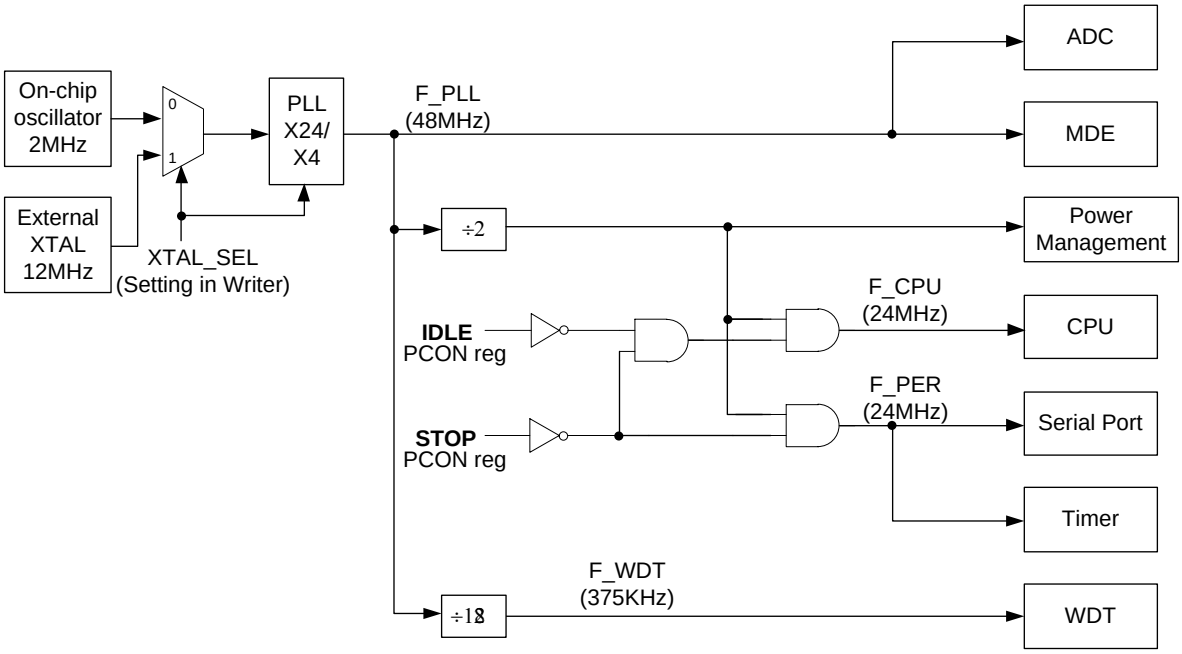

## 15.4 Timer

The CGF082A has three 16-bit timer/counter registers: Timer0, Timer1 and Timer2. All can be configured for counter, or timer, operations.
In addition to the “timer” or “counter” selection, Timer0 and Timer1 have four operating modes from which to select which are selected by bit-pairs (M1, M0) in TMOD. Modes 0, 1,and 2 are the same for both timer/counters. Mode 3 is different.

| | Timer0 | Timer1 | Timer2 |
|---|---|---|---|
| Mode 0 | 13-bit timer/counter | 13-bit timer/counter | 13-bit timer/counter |
| Mode 1 | 16-bit timer/counter | 16-bit timer/counter | 16-bit timer/counter |
| Mode 2 | 8-bit auto-reload timer/counter | 8-bit auto-reload timer/counter | 8-bit auto-reload timer/counter |
| Mode 3 | two independent 8-bit timers/counters | stop | 8-bit timers/counters |

Two Special Function registers (TMOD and TCON) are used to select the appropriate mode.

| SFR | Description | address | Reset value |
|---|---|---|---|
| PFCON | Peripheral Frequency Control Register | D1H | 00H |
| TMOD | Timer 0/1 Mode Register | 89H | 00H |
| TCON | Timer 0/1 Control Register | 88H | 00H |
| T2CON | Timer2 Control Register | C8H | 00H |
| TH0 | Timer0 High byte | 8CH | 00H |
| TL0 | Timer0 Low byte | 8AH | 00H |
| TH1 | Timer1 High byte | 8DH | 00H |
| TL1 | Timer1 Low byte | 8BH | 00H |
| TH2 | Timer2 High byte | B5H | 00H |
| TL2 | Timer2 Low byte | B4H | 00H |

### 15.4.1 PFCON (Peripheral Frequency Control Register)

PFCON Address = D1H Reset Value = 0x00H

Peripheral Frequency Control Register

| Bit | ----- | ----- | SRELPS[1:0] | | T1PS[1:0] | | T0PS[1:0] | |
|---|---|---|---|---|---|---|---|---|
| | 7 | 6 | 5 | 4 | 3 | 2 | 1 | 0 |
| Type | X | X | R/W | R/W | R/W | R/W | R/W | R/W |

| | |
|---|---|
| SRELPS[5:4] | Serial port (UART) Prescaler select :<br>00 :F_PER/64<br>01 :F_PER/32<br>10 :F_PER/16<br>11 :F_PER/8 |
| T1PS[3:2] | Timer1(T1) Prescaler select :<br>00 :F_PER/12<br>01 :F_PER<br>10 :F_PER/96<br>11 :----- |
| T0PS[1:0] | Timer0(T0) Prescaler select :<br>00 :F_PER/12<br>01 :F_PER<br>10 :F_PER/96<br>11 :----- |

### 15.4.2 TMOD (Timer 0/1 Mode Register)

TMOD register is used in configuration of MCUTimer0 and Timer1.

| TMOD<br>Timer 0/1 Mode Register | Address = 89H | | | | | Reset Value = 0x00H | | |
|---|---|---|---|---|---|---|---|---|
| Bit | GATE1 | C/T1 | T1M1 | T1M0 | GATE0 | C/T0 | T0M1 | T0M0 |
| | 7 | 6 | 5 | 4 | 3 | 2 | 1 | 0 |
| Type | R/W | R/W | R/W | R/W | R/W | R/W | R/W | R/W |

| | |
|---|---|
| GATE1<br>[7] | Timer1 gate control :<br>If set, enables external gate control (pin INT1N) for Counter1. When INT1N is high, and TR1 bit is set, the Counter1 is incremented every falling edge on INT1N input pin |
| C/T1<br>[6] | Timer1 counter/timer select :<br>0 : Timer<br>1 : Counter |
| GATE0<br>[3] | Timer 0 gate control :<br>If set, enables external gate control (pin INT0N) for Counter0. When INT0N is high, and TR0 bit is set, the Counter0 is incremented every falling edge onINT0N input pin |
| C/T0<br>[2] | Timer0 counter/timer select :<br>0 : Timer<br>1 : Counter |

| T1M1 /T0M1 | T1M0 /T0M0 | Mode | Function |
|---|---|---|---|
| 0 | 0 | Mode0 | 13-bit Counter/Timer, with 5 lower bits in TL0 (TL1) register and 8 bits in TH0 (TH1) register (for Timer0 or Timer1, respectively). The 3 high-order bits of TL0 (TL1) are zeroed whenever Mode 0 is enabled. (Not auto-reload) |
| 0 | 1 | Mode1 | 16-bit Counter/Timer. (Not auto-reload) |
| 1 | 0 | Mode2 | 8 -bit auto-reload Counter/Timer. The reload value is kept in TH0 (TH1), while TL0 (TL1) is incremented every clock cycle. Reloaded from TH0 (TH1) at overflow. |
| 1 | 1 | Mode3 | For Timer1: Timer1 is stopped.<br>For Timer0: Timer0 acts as two independent 8 bit Timers / Counters – TL0, TH0. (Not auto-reload) |

### 15.4.3 TCON (Timer 0/1Control Register)

TCON register is used to control operation of these modules.CGF082A includes two external digital interrupt sources INT0N and INT1N), with dedicated interrupt sources. INT0N and INT1N are configurable as falling edge or low level. The IT0 and IT1 bits in TCON select level- or edge-sensitive.IE0 and IE1 in the TCON register serve as the interrupt-pending flags for the INT0N and INT1N external interrupts, respectively.

| TCON<br>Timer 0/1 Control Register | | | Address = 88H | | | Reset Value = 0x00H | | |
|---|---|---|---|---|---|---|---|---|
| Bit | TF1 | TR1 | TF0 | TR0 | IE1 | IT1 | IE0 | IT0 |
| | 7 | 6 | 5 | 4 | 3 | 2 | 1 | 0 |
| Type | R/W | R/W | R/W | R/W | R/W | R/W | R/W | R/W |

| | |
|---|---|
| TF1 | Timer1 overflow flag :<br>Bit set by hardware when Timer1 overflows. This flag can be cleared by software and is automatically cleared when interrupt is processed. |
| TR1 | Timer1 run control :<br>0 : Stop<br>1 : Run |
| TF0 | Timer0 overflow flag :<br>Bit set by hardware when Timer1 overflows. This flag can be cleared by software and is automatically cleared when interrupt is processed. |
| TR0 | Timer0run control :<br>0 : Stop<br>1 : Run |
| IE1 | External interrupt 1 flag :<br>Set by hardware, when External interrupt (INT1N) is observed. Cleared by hardware when interrupt is processed. |
| IT1 | External interrupt 1 type control :<br>0 : External interrupt 1 is activated at low level on input pin<br>1 : External interrupt 1 is activated at falling edge on input pin |
| IE0 | External interrupt 0 flag :<br>Set by hardware, when External interrupt (INT0N) is observed. Cleared by hardware when interrupt is processed. |
| IT0 | External interrupt 0 type control :<br>0 : External interrupt 0 is activated at low level on input pin<br>1 : External interrupt 0 is activated at falling edge on input pin |

The TF0, TF1 (Timer0 andTimer1 overflow flags), IE0 and IE1 (External interrupt 0 and 1 flags) will be automatically cleared by hardware when the corresponding service routine is called.

### 15.4.4 T2CON (Timer2 Control Register)

T2CON is used to control Timer2 run/stop, mode, prescaler.

| T2CON<br>Timer2 Control Register | | | Address = C8H | | | Reset Value = 0x00H | | |
|---|---|---|---|---|---|---|---|---|
| Bit | ----- | ----- | TF2 | TR2 | T2M1 | T2M0 | T2PS1 | T2PS0 |
| | 7 | 6 | 5 | 4 | 3 | 2 | 1 | 0 |
| Type | X | X | R/W | R/W | R/W | R/W | R/W | R/W |

| | |
|---|---|
| TF2 | Timer2 overflow flag : |

| | | | |
|---|---|---|---|
| | Bit set by hardware when Timer2 overflows. This flag can be cleared by software and is automatically cleared when interrupt is processed. | | |
| TR2 | Timer2run control :<br>0 : Stop<br>1 : Run | | |
| T2PS[1:0] | Timer2(T2) Prescaler select :<br>00 :F_PER/12<br>01 : F_PER<br>10 : F_PER/96<br>11 :----- | | |
| T2M1 | T2M0 | Mode | Function |
| 0 | 0 | Mode0 | 13-bit Timer, with 5 lower bits in TL2 register and 8 bits in TH2 register.(Not auto-reload) |
| 0 | 1 | Mode1 | 16-bit Timer. (Not auto-reload) |
| 1 | 0 | Mode2 | 8 -bit auto-reload Timer. The reload value is kept in TH2, while TL2 is incremented every clock cycle. Reloaded from TH2 at overflow. |
| 1 | 1 | Mode3 | 8 bit Timers. (Not auto-reload) |

### 15.4.5 Timer0 Mode 0

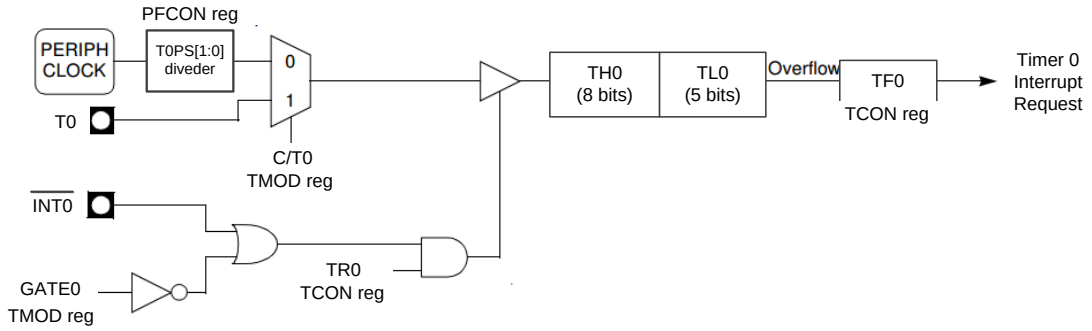


### 15.4.6 Timer0 Mode 1

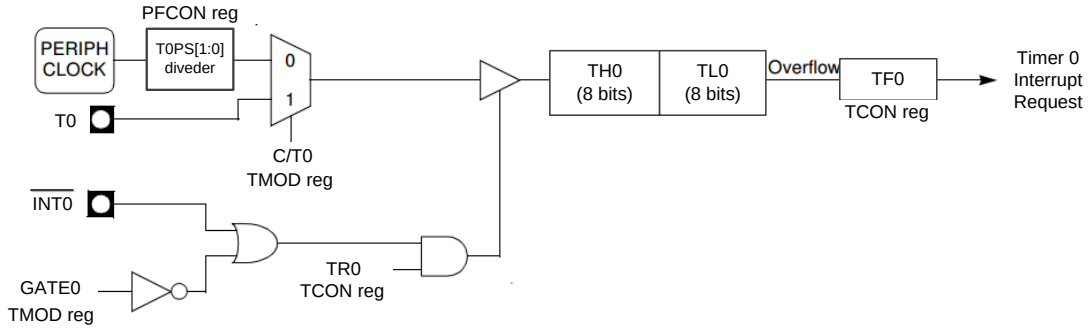


### 15.4.7 Timer0 Mode 2

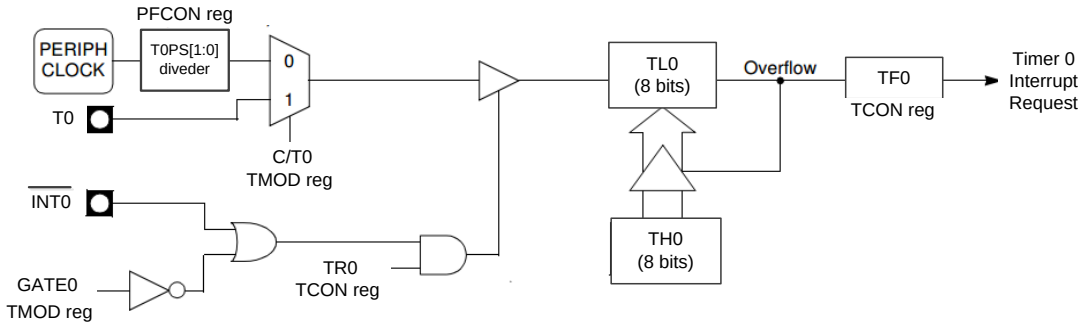


### 15.4.8 Timer0 Mode 3

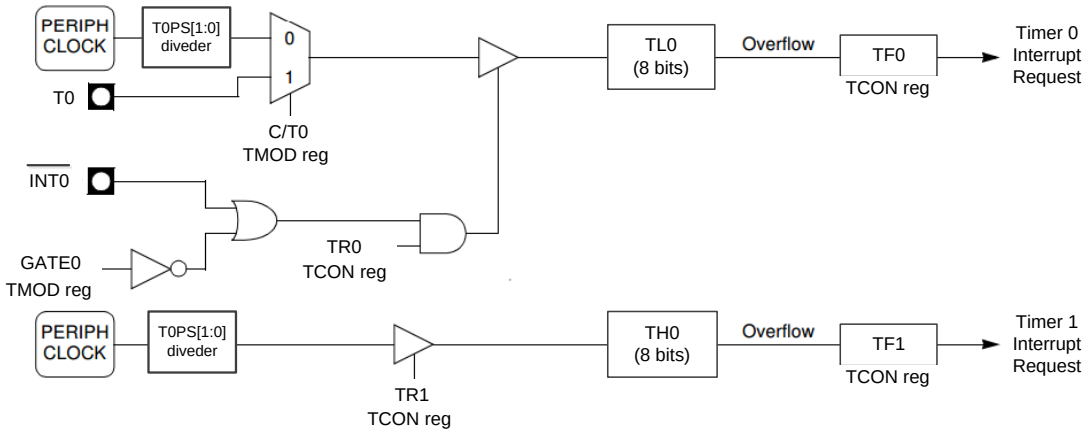

### 15.4.9 Timer1 Mode 0

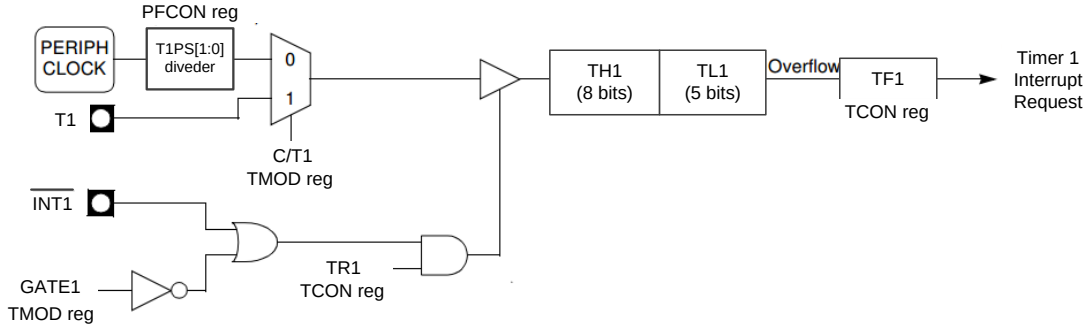


### 15.4.10 Timer1 Mode 1

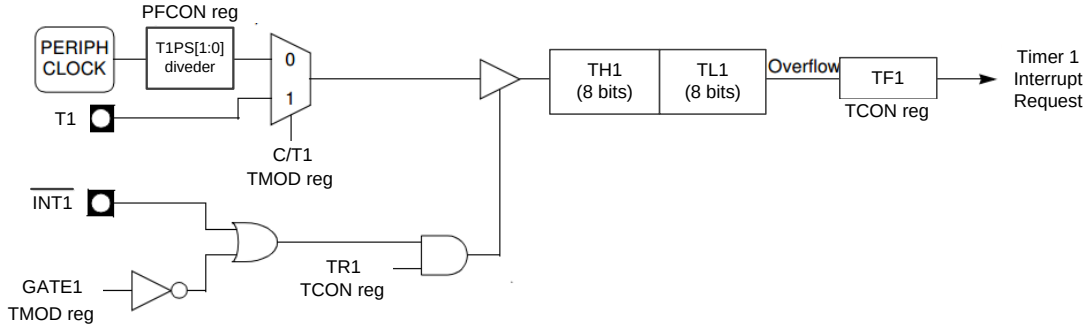


### 15.4.11 Timer1 Mode 2

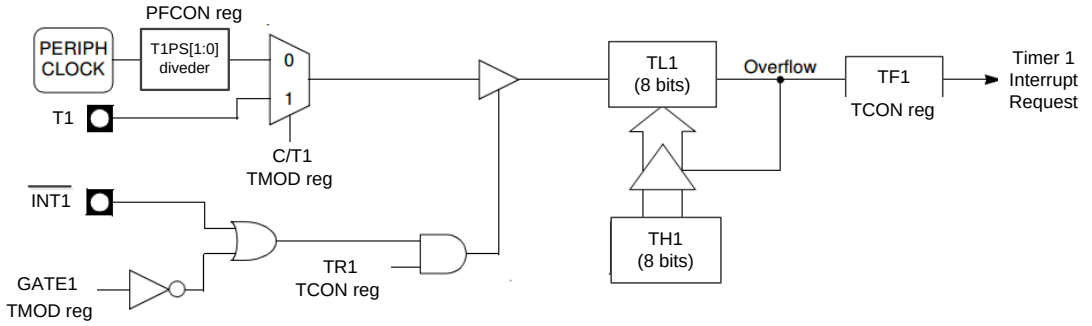


### 15.4.12 Timer2 Mode 0

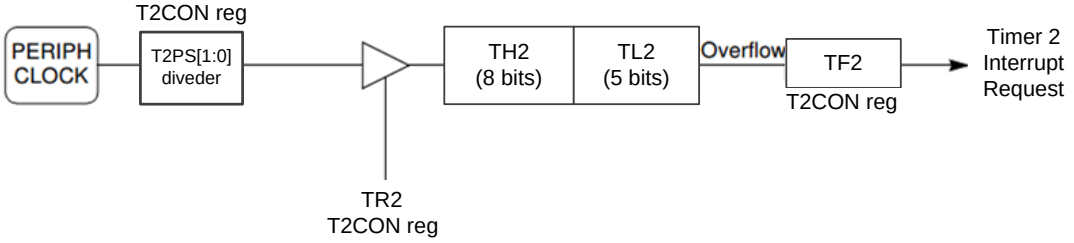

### 15.4.13 Timer2 Mode 1

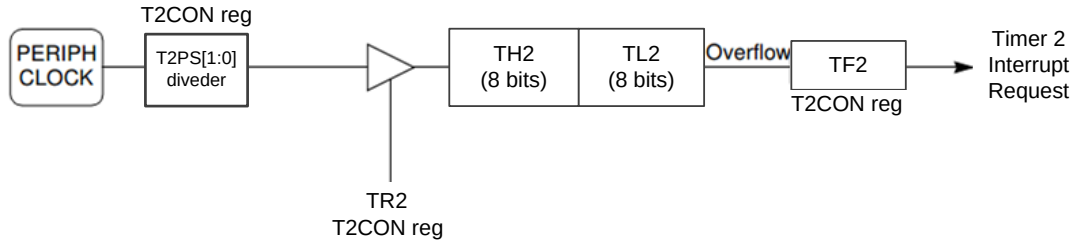


### 15.4.14 Timer2 Mode 2

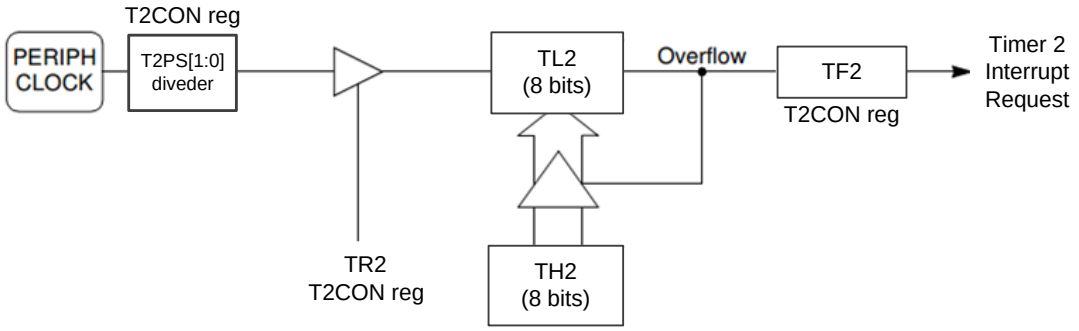


### 15.4.15 Timer2 Mode 3

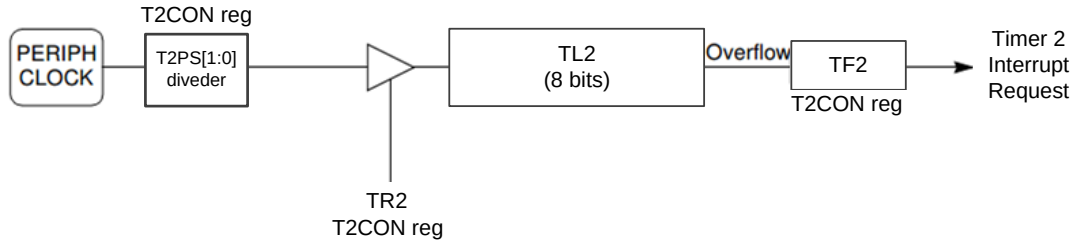

## 15.5 Watchdog Timer

The Watchdog Timer (WDT) is a8-bit free-running counter that generates a reset signal or interrupt (WDTC.6) if it overflows. It can help the application software to recover from an abnormal condition. The WDT is independent from Timer0, Timer1, or Timer2. The F_WDT is 375KHz, it is from on-chip RC oscillator.

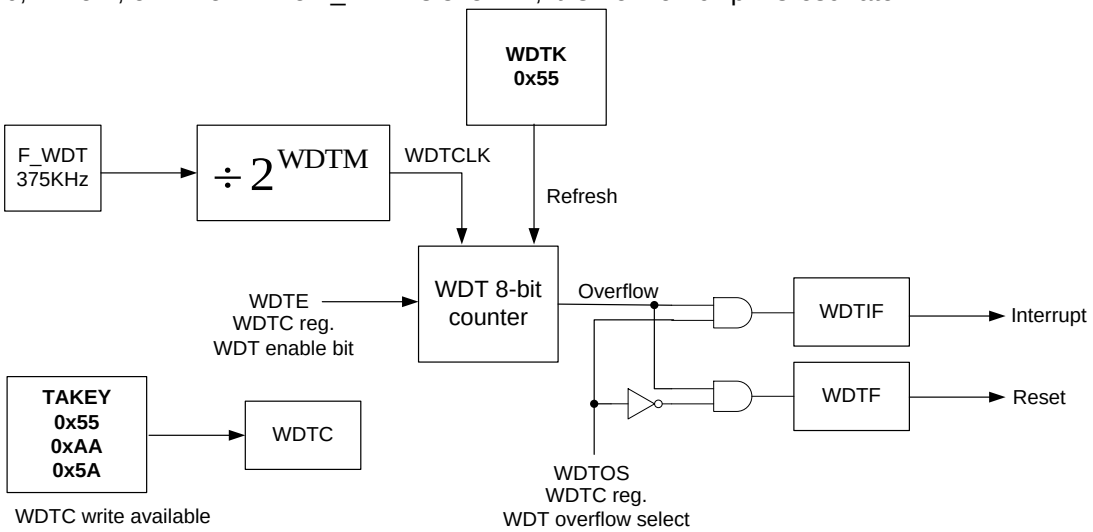


Figure 12.5.1 WDT block diagram

WDTCLK = F_WDT x 1 / $2^{WDTM}$

WDT (8-bit counter) overflow time = 256 / WDTCLK

| SFR | Description | address | Reset value |
|---|---|---|---|
| RSTS | Reset Source Register | FEH | 0AH |
| TAKEY | Time Access Key Register | FFH | 00H |
| WDTC | Watchdog Timer Control Register | B6H | 04H |
| WDTK | Watchdog Timer Refresh Key | B7H | 00H |

| RSTS<br>Reset Source Register | Address = FEH | | | | | | Reset Value = 0x0AH | |
|---|---|---|---|---|---|---|---|---|
| Bit | ----- | ----- | ----- | WDTRF | PINRF[1:0] | | PORF[1:0] | |
| | 7 | 6 | 5 | 4 | 3 | 2 | 1 | 0 |
| Type | X | X | X | R/W | R/W | R/W | R/W | R/W |

| | |
|---|---|
| WDTRF | Watchdog timer reset flag.<br>This flag is set to 1 if the Watchdog Timer Reset caused the reset. |
| PINRF[1:0] | RSTN pin reset flag.<br>This flag is set to 10b if the RSTN pin caused the reset.<br>Clear by firmware. |
| PORF[1:0] | POR reset flag.<br>This flag is set to 10b if the POR caused the reset.<br>Clear by firmware. |

### 15.5.1 WDTC (Watchdog Timer Control Register)

| WDTC<br>Watchdog Timer Control Register | Address = B6H | | | | | | Reset Value = 0x04H | |
|---|---|---|---|---|---|---|---|---|
| Bit | ----- | WDTOS | WDTE | ----- | WDTM[3:0] | | | |
| | 7 | 6 | 5 | 4 | 3 | 2 | 1 | 0 |
| Type | X | R/W | R/W | X | R/W | R/W | R/W | R/W |

| | |
|---|---|
| WDTOS | Watchdog timer overflow select :<br>0 : When WDT overflow, enable WDT reset.<br>1 : When WDT overflow, enable WDT interrupt. |
| WDTE | Watchdog timer enable :<br>0 : Disable WDT.<br>1 : Enable WDT. |
| WDTM[3:0] | WDT clock divider :<br>WDTCLK = 375KHz x 1 / $2^{WDTM}$ (default is 375K / 16) |

### 15.5.2 TAKEY (Time Access Key Register)

| TAKEY | Address = FFH | Reset Value = 0x00H |
|---|---|---|

Time Access Key Register

| Bit | TAKEY[7:0] | | | | | | | |
|---|---|---|---|---|---|---|---|---|
| | 7 | 6 | 5 | 4 | 3 | 2 | 1 | 0 |
| Type | R/W | R/W | R/W | R/W | R/W | R/W | R/W | R/W |

WDTC default is read only, must write three specific values 55H, AAH and 5AH to the TAKEY enable the WDTC write available.
The sequence is:
MOV TAKEY, #55h
MOV TAKEY, #AAh
MOV TAKEY, #5Ah

### 15.5.3 WDTK (Watchdog Timer Refresh Key)

| WDTK | Address = B7H | Reset Value = 0x00H |
|---|---|---|

Watchdog Timer Refresh Key

| Bit | WDTK[7:0] | | | | | | | |
|---|---|---|---|---|---|---|---|---|
| | 7 | 6 | 5 | 4 | 3 | 2 | 1 | 0 |
| Type | R/W | R/W | R/W | R/W | R/W | R/W | R/W | R/W |

The application must write 0x55 into the WDTK register, for the Watchdog timer to be cleared.

For example, enable the watchdog with a time-out reset period of 5.461ms.

Following write sequence:
MOV TAKEY, #55h
MOV TAKEY, #AAh
MOV TAKEY, #5Ah ; WDTC write is available.
MOV WDTC, #23h ; WDTM [3:0] = 0111b. WDTE =1 to enable the WDT.
MOV WDTK, #55h ;Refresh WDT.

## 15.6 Serial Port (UART)

The Serial Port provides a flexible full-duplex synchronous/asynchronous receiver/transmitter, called UART. The communication rate can be set by configuring the baud rate in SFRs. The two serial buffers consist of two separate registers, a transmit buffer and a receive buffer. Writing data to the SFR SBUF, transfers the data to the serial output buffer and starts the transmission. Reading from the SBUF, reads data from the serial receive buffer. The serial port can simultaneously transmit and receive data. It can also buffer 1 byte at receive, which prevents the receive data from being lost if the CPU reads the second byte before the transmission of the first byte is completed.

| SFR | Description | address | Reset value |
|---|---|---|---|
| AUX | Auxiliary | 8EH | 11H |
| PFCON | Peripheral Frequency Control Register | D1H | 00H |
| SCON | Serial Port Control Register | 98H | 00H |
| SBUF | Serial Port Data Buffer | 99H | 00H |
| SRELH | Serial Port Reload Register High | 9BH | 00H |
| SRELL | Serial Port Reload Register Low | 9AH | 00H |

| AUX Auxiliary Register | | | Address = 8EH | | | | Reset Value = 0x11H | |
|---|---|---|---|---|---|---|---|---|
| Bit | LVD_EN | LVD | ----- | ITS | SMOD | BRS | DPS | CP |
| | 7 | 6 | 5 | 4 | 3 | 2 | 1 | 0 |
| Type | R/W | R | X | R/W | R/W | R/W | R/W | R |

| | |
|---|---|
| LVD_EN | Low voltage detect enable :<br>1: Enable |
| LVD | Low voltage detect status. :<br>1: Low voltage occur |
| ITS | MCU instruction timing select. :<br>0:1T<br>1:2T |
| SMOD | Serial Port (UART) baud rate select. |
| BRS | Serial Port (UART) baud rate generator select. |
| DPS | Data pointer register select :<br>0 : Select DPTR Register DP0H, DP0L<br>1 : Select DPTR Register DP1H, DP1L |
| CP | Code protect :<br>0 : Non-protect<br>1: Protect |

| PFCON | Address = D1H | Reset Value = 0x00H |
|---|---|---|

Peripheral Frequency Control Register

| Bit | ----- | ----- | SRELPS[1:0] | | T1PS[1:0] | | T0PS[1:0] | |
|---|---|---|---|---|---|---|---|---|
| | 7 | 6 | 5 | 4 | 3 | 2 | 1 | 0 |
| Type | X | X | R/W | R/W | R/W | R/W | R/W | R/W |

| | |
|---|---|
| SRELPS[1:0] | Serial port (UART) Prescaler select :<br>00 :F_PER/64<br>01 :F_PER/32<br>10 :F_PER/16<br>11 :F_PER/8 |
| T1PS[1:0] | Timer1(T1) Prescaler select :<br>00 :F_PER/12<br>01 :F_PER<br>10 :F_PER/96<br>11 :----- |
| T0PS[1:0] | Timer0(T0) Prescaler select :<br>00 : F_PER/12<br>01 : F_PER<br>10 : F_PER/96<br>11 :----- |

### 15.6.1 SCON (Serial Port Control Register)

The SCON register controls the function of Serial Port (UART).

| SCON | Address = 98H | Reset Value = 0x00H |
|---|---|---|
| Serial Port Control Register | | |

| Bit | SM0 | SM1 | SM2 | REN | TB8 | RB8 | TI | RI |
|---|---|---|---|---|---|---|---|---|
| | 7 | 6 | 5 | 4 | 3 | 2 | 1 | 0 |
| Type | R/W | R/W | R/W | R/W | R/W | R/W | R/W | R/W |

| SM0 | SM1 | Mode | Description | Baud Rate | |
|---|---|---|---|---|---|
| 0 | 0 | Mode 0 | Shift register | F_PER/12 | |
| 0 | 1 | Mode 1 | 8bit UART | Variable | |
| 1 | 0 | Mode 2 | 9bit UART | Depends on SMOD (AUX.3) | |
| | | | | SMOD | Baud Rate |
| | | | | 0 | F_PER/64 |
| | | | | 1 | F_PER/32 |
| 1 | 1 | Mode 3 | 9bit UART | Variable | |

| | |
|---|---|
| SM2 | Multiprocessor communication enable |
| REN | Serial reception enable :<br>0 : Serial reception at Serial Port is disabled.<br>1 :Serial reception at Serial Port is enabled. |
| TB8 | Transmitter bit 8 :<br>This bit is used while transmitting data through Serial Port in Modes 2 and 3. The state of this bit corresponds with the state of the 9th transmitted bit (e.g. parity check or multiprocessor communication). It is controlled by software. |
| RB8 | Received bit 8 :<br>This bit is used while receiving data through Serial Port 0 in Modes 2 and 3. It reflects the state of the 9th received bit.<br>In Mode 1, if multiprocessor communication is enabled (sm2 = 0), this bit is the stop bit that was received.<br>In Mode 0 this bit is not used. |
| TI | Transmit interrupt flag : (completion of a serial transmission)<br>It is set by hardware at the end of bit 8 in mode 0 or at the beginning of a stop bit in other modes. It must be cleared by software. |
| RI | Receive interrupt flag : (It must be cleared by software.)<br>It is set by hardware after completion of a serial reception at Serial Port 0.<br>It is set by hardware at the end of bit 8 in mode 0 or in the middle of a stop bit in other modes. |

Serial Port working in modes 1 or mode 3:

When BRS = 0 (AUX.2)

TIPS[1:0] = 00b

$$\text{Baud rate} = \frac{2^{SMOD}}{32\times(256-TH1)} \times \frac{F_PER}{12}$$

TIPS[1:0] = 01b

$$\text{baud rate} = \frac{2^{SMOD}}{32\times(256-TH1)} \times F_PER$$

TIPS[1:0] = 10b

$$\text{baud rate} = \frac{2^{SMOD}}{32\times(256-TH1)} \times \frac{F_PER}{96}$$

When BRS = 1 (AUX.2)

SRELPS[1:0] = 00b

$$\text{baud rate} = \frac{2^{SMOD}}{2^{10}-SREL[H,L]} \times \frac{F_PER}{64}$$

SRELPS [1:0] = 01b

$$\text{baud rate} = \frac{2^{SMOD}}{2^{10}-SREL[H,L]} \times \frac{F_PER}{32}$$

SRELPS [1:0] = 10b

$$\text{baud rate} = \frac{2^{SMOD}}{2^{10}-SREL[H,L]} \times \frac{F_PER}{16}$$

SRELPS [1:0] = 11b

$$\text{baud rate} = \frac{2^{SMOD}}{2^{10}-SREL[H,L]} \times \frac{F_PER}{8}$$

### 15.6.2 SBUF (Serial Port Data Buffer)

Writing data to this register sets data in serial output buffer and starts the transmission through Serial Port. Reading from the SBUF, reads data from the serial receive buffer.

| SBUF | Address = 99H | Reset Value = 0x00H |
|---|---|---|
| Serial Port Data Buffer | | |

| Bit | SBUF[7:0] | | | | | | | |
|---|---|---|---|---|---|---|---|---|
| | 7 | 6 | 5 | 4 | 3 | 2 | 1 | 0 |
| Type | R/W | R/W | R/W | R/W | R/W | R/W | R/W | R/W |

### 15.6.3 SREL (Serial Port Reload Register)

Serial Port Reload Register is used for Serial Port baud rate generation. Only 10 bits are used, where 8 bits from the SRELL as lower bits and 2 bits from the SRELH (SRELH.1, SRELH.0) as higher bits.

| SRELL | Address = 9AH | Reset Value = 0x00H |
|---|---|---|
| Serial Port Reload Register Low | | |

| Bit | SREL[7:0] | | | | | | | |
|---|---|---|---|---|---|---|---|---|
| | 7 | 6 | 5 | 4 | 3 | 2 | 1 | 0 |
| Type | R/W | R/W | R/W | R/W | R/W | R/W | R/W | R/W |

| SRELH | Address = 9BH | Reset Value = 0x00H |
|---|---|---|
| Serial Port Reload Register High | | |

| Bit | ----- | ----- | ----- | ----- | ----- | ----- | SREL.9 | SREL.8 |
|---|---|---|---|---|---|---|---|---|
| | 7 | 6 | 5 | 4 | 3 | 2 | 1 | 0 |
| Type | X | X | X | X | X | X | R/W | R/W |

## 15.7 Power Management

The Power Control Register (PCON) is used to control the CGF082A STOP and IDLE power management modes.

| PCON | Address = 87H | Reset Value = 0x00H |
|---|---|---|
| Power Control Register | | |

| Bit | ----- | ----- | ----- | ----- | ----- | ----- | STOP | IDLE |
|---|---|---|---|---|---|---|---|---|
| | 7 | 6 | 5 | 4 | 3 | 2 | 1 | 0 |
| Type | X | X | X | X | X | X | R/W | R/W |

| | |
|---|---|
| STOP | Stop mode bit. |
| [1] | Setting this bit activates STOP operation. (read as 0) |
| IDLE | Idle mode bit. |
| [0] | Setting this bit activates IDLE mode operation. (read as 0) |

### 15.7.1 STOP MODE

Setting the STOP Mode Select bit (PCON.1) causes the controller core to enter STOP mode as soon as the instruction that sets the bit completes execution. In STOP mode the CPU, GPIO, UART, and Timers are stopped, but the ADC, MDE, and WDT is still work.

STOP mode can terminate by an internal or external reset. On reset, the device performs the normal reset sequence and begins program execution at address 0x0000.

The assertion of an enabled interrupt will cause the STOP Mode Selection bit (PCON.1) to be cleared and the CPU to resume operation.

### 15.7.2 IDLE MODE

Setting the IDLE Mode Select bit (PCON.0) causes the hardware to halt the CPU and enter IDLE mode as soon as the instruction that sets the bit completes execution.
In IDLE mode only the CPU is stop. All internal registers and memory maintain their original data.
IDLE mode can terminate by an internal or external reset. On reset, the device performs the normal reset sequence and begins program execution at address 0x0000.
The assertion of an enabled interrupt will cause the IDLE Mode Selection bit (PCON.0) to be cleared and the CPU to resume operation.

## 15.8 Reset

The reset logic is used to place the device into a known state.
CGF082A provides Power-on Reset flag, External Reset RSTN flag and Watchdog timer Reset flag to monitor reset status. The source of the reset can be monitor.

### 15.8.1 RSTS (Reset Source Register)

| RSTS<br>Reset Source Register | Address = FEH | | | | | | Reset Value = 0x0AH | |
|---|---|---|---|---|---|---|---|---|
| Bit | ----- | ----- | ----- | WDTRF | PINRF[1:0] | | PORF[1:0] | |
| | 7 | 6 | 5 | 4 | 3 | 2 | 1 | 0 |
| Type | X | X | X | R/W | R/W | R/W | R/W | R/W |

| | |
|---|---|
| WDTRF<br>[4] | Watchdog timer reset flag.<br>This flag is set to 1 if the Watchdog Timer Reset caused the reset. |
| PINRF<br>[3:2] | RSTN pin reset flag.<br>This flag is set to 10b if the RSTN pin caused the reset.<br>Clear by firmware. |
| PORF<br>[1:0] | POR reset flag.<br>This flag is set to 10b if the POR caused the reset.<br>Clear by firmware. |

## 15.9 Interrupt Controller

The ISR - Interrupt Service Routine unit, is a subcomponent responsible for interrupt handling. It receives up to 14 interrupt requests. Each interrupt source has its own request flag that is located in devices which is a source of interrupt. No interrupt request flags are located directly in ISR. All interrupts are requested by high level on correspondent inputs to ISR. Each of the interrupt sources can be individually enabled or disabled by corresponding enable flag in IEN0, IEN1SFR registers. Additionally all interrupts can be globally enabled or disabled by the —EA flag in the IEN0 SFR. All interrupt sources are divided into 6 interrupts groups. Each of the interrupt groups can have one of four interrupt priority levels assigned. The interrupt priority level is defined by flags located in the IP0 and IP1 SFR registers.

| Interrupt Number (use Keil C Tool) | Interrupt Vector Address | Interrupt Request Flags |
|---|---|---|
| 0 | 0003H | IE0 – External interrupt 0 |
| 1 | 000BH | TF0 – Timer0 interrupt |
| 2 | 0013H | IE1 – External interrupt 1 |
| 3 | 001BH | TF1 – Timer1 interrupt |
| 4 | 0023H | SPIF(TI, RI)– Serial port interrupt |
| 5 | 002BH | TF2 – Timer2 interrupt |
| 6 | 0033H | ----- |
| 7 | 003BH | ----- |
| 8 | 0043H | OCPSIF – OCP Short interrupt |
| 9 | 004BH | ADCIF –ADC interrupt |
| 10 | 0053H | MPWMMINIF–MPWM MIN interrupt |
| 11 | 005BH | MPWMMAXIF–MPWM MAX interrupt |
| 12 | 0063H | IICIF – IIC interrupt |
| 13 | 006BH | LVDIF – Low voltage detect interrupt |
| 14 | 0073H | WDTIF – Watchdog timer interrupt |
| 15 | 007BH | CAPTUREIF –CAPTURE interrupt |

Table15.9.1 Interrupt vectors

| Group priority | Interrupt Group | Highest priority in group | | Lowest priority in group |
|---|---|---|---|---|
| Highest | Group0 | LVDIF | IE0 | ----- |
| | Group1 | WDTIF | TF0 | ----- |
| | Group2 | OCPSIF | ADCIF | IE1 |
| | Group3 | MPWMMINIF | MPWMMAXIF | TF1 |
| | Group4 | IICIF | SPIF(TI, RI) | ----- |
| Lowest | Group5 | CAPIF | TF2 | ----- |

Table12.9.2 Interrupt Priority Groups

| SFR | Description | address | Reset value |
|---|---|---|---|
| IEN0 | Interrupt Enable Register 0 | A8H | 00H |
| IEN1 | Interrupt Enable Register 1 | B8H | 00H |
| IRCON1 | Interrupt Request Register 1 | C0H | 00H |
| IP0 | Interrupt Priority Register 0 | A9H | 00H |
| IP1 | Interrupt Priority Register 1 | B9H | 00H |

### 15.9.1 IEN0 (Interrupt Enable Register 0)

IEN0 Address = A8H Reset Value = 0x00H

Interrupt Enable Register 0

| Bit | EA | ----- | ET2 | ESP | ET1 | EX1 | ET0 | EX0 |
|---|---|---|---|---|---|---|---|---|
| | 7 | 6 | 5 | 4 | 3 | 2 | 1 | 0 |
| Type | R/W | X | R/W | R/W | R/W | R/W | R/W | R/W |

| | |
|---|---|
| EA<br>[7] | Interrupts enable :<br>0 : Disable All interrupts.<br>1 : Enable interrupt. |
| ET2<br>[5] | Timer2 interrupt enable:<br>0 : Disable Timer2 overflow interrupt.<br>1 : When EA = 1, enable Timer2 overflow interrupt. |
| ESP<br>[4] | Serial port interrupt enable:<br>0 : Disable Serial port interrupt.<br>1 : When EA = 1, enable Serial port interrupt. |
| ET1<br>[3] | Timer1 interrupt enable:<br>0 : Disable Timer1 overflow interrupt.<br>1 : When EA = 1, enable Timer1 overflow interrupt. |
| EX1<br>[2] | External interrupt 1 enable:<br>0 : Disable External interrupt 1.<br>1 : When EA = 1, enable External interrupt 1. |
| ET0<br>[1] | Timer0 interrupt enable:<br>0 : Disable Timer0 overflow interrupt.<br>1 : When EA = 1, enable Timer0 overflow interrupt. |
| EX0<br>[0] | External interrupt 0 enable:<br>0 : Disable External interrupt 0.<br>1 : When EA = 1, enable External interrupt 0. |

### 15.9.2 IEN1 (Interrupt Enable Register 1)

IEN1 Address = B8H Reset Value = 0x00H

Interrupt Enable Register 1

| Bit | CAPIE | WDTIE | LVDIE | IICIE | MPWMMAXIE | MPWMMINIE | ADCIE | OCPSIE |
|---|---|---|---|---|---|---|---|---|
| | 7 | 6 | 5 | 4 | 3 | 2 | 1 | 0 |
| Type | R/W | R/W | R/W | R/W | R/W | R/W | R/W | R/W |

| | |
|---|---|
| CAPIE<br>[7] | Capture interrupt enable:<br>0 : Disable CAPTURE interrupt.<br>1 : When EA = 1, enable CAPTURE interrupt. |
| WDTIE<br>[6] | Watchdog timer interrupts enable :<br>0 : Disable WDT interrupt.<br>1 : When EA = 1 and WDTOS = 1, enable WDT overflow interrupt. |
| LVDIE<br>[5] | LVD (Low voltage detect) interrupt enable:<br>0 : Disable LVD interrupt.<br>1 : When EA = 1, enable LVD interrupt. |
| IICIE<br>[3] | IIC interrupt enable:<br>0 : Disable IIC interrupt.<br>1 : When EA = 1, enable IIC interrupt. |
| MPWMMAXIE<br>[3] | MPWM maximum interrupt enable:<br>0 : Disable MPWM maximum interrupt.<br>1 : When EA = 1, enable MPWM maximum interrupt. |
| MPWMMINIE<br>[2] | MPWM minimum interrupt enable:<br>0 : Disable MPWM minimum interrupt .<br>1 : When EA = 1, enable MPWM minimum interrupt. |
| ADCIE<br>[1] | ADC interrupt enable:<br>0 : Disable ADC interrupt.<br>1 : When EA = 1, enable ADC interrupt. |
| OCPSIE<br>[0] | OCP (Over current protect) Short interrupt enable:<br>0 : Disable OCP Short interrupt .<br>1 : When EA = 1, enable OCP Short interrupt. |

### 15.9.3 IRCON1 (Interrupt Request Register 1)

IRCON1 Address = C0H Reset Value = 0x00H

Interrupt Request Register 1

| Bit | CAPTUREIF | WDTIF | LVDIF | IICIF | MPWMMAXIF | MPWMMINIF | ADCIF | OCPSIF |
|---|---|---|---|---|---|---|---|---|
| | 7 | 6 | 5 | 4 | 3 | 2 | 1 | 0 |
| Type | R/W | R/W | R/W | R/W | R/W | R/W | R/W | R/W |

| | |
|---|---|
| CAPTIF[7] | Capture interrupt (Counter Over flow and Rising trigger) flag. |
| WDTIF[6] | Watchdog timer interrupts flag. |
| LVDIF[5] | LVD (Low voltage detect) interrupt flag. |
| IICIF[4] | IIC interrupt flag. |
| MPWMMAXIF[3] | MPWM maximum interrupt flag. |
| MPWMMINIF[2] | MPWM minimum interrupt flag. |
| ADCIF[1] | ADC interrupt flag. |
| OCPSIF[0] | OCP Short interrupt flag.(AOCP and DOCPN) |

### 15.9.4 IP (Interrupt Priority Register)

The 13 interrupt sources are grouped into 6 priority groups. For each of the groups, one of four priority levels can be selected. It is achieved by setting appropriate values in IP0 and IP1 registers. The contents of the Interrupt Priority Registers define the priority levels for each interrupt source according to the tables below.

IP0 Address = A9H Reset Value = 0x10H

Interrupt Priority Register 0

| | | | | | | | | |
|---|---|---|---|---|---|---|---|---|
| Bit | ----- | ----- | G5IP0 | G4IP0 | G3IP0 | G2IP0 | G1IP0 | G0IP0 |
| | 7 | 6 | 5 | 4 | 3 | 2 | 1 | 0 |
| Type | X | X | R/W | R/W | R/W | R/W | R/W | R/W |

| | |
|---|---|
| G5IP0[5] | Group5 interrupt priority bit 0 |
| G4IP0[4] | Group4 interrupt priority bit 0 |
| G3IP0[3] | Group3 interrupt priority bit 0 |
| G2IP0[2] | Group2 interrupt priority bit 0 |
| G1IP0[1] | Group1 interrupt priority bit 0 |
| G0IP0[0] | Group0 interrupt priority bit 0 |

IP1 Address = B9H Reset Value = 0x00H

Interrupt Priority Register 1

| | | | | | | | | |
|---|---|---|---|---|---|---|---|---|
| Bit | ----- | ----- | G5IP1 | G4IP1 | G3IP1 | G2IP1 | G1IP1 | G0IP1 |
| | 7 | 6 | 5 | 4 | 3 | 2 | 1 | 0 |
| Type | X | X | R/W | R/W | R/W | R/W | R/W | R/W |

| | |
|---|---|
| G5IP1[5] | Group5 interrupt priority bit 1 |
| G4IP1[4] | Group4 interrupt priority bit 1 |
| G3IP1[3] | Group3 interrupt priority bit 1 |
| G2IP1[2] | Group2 interrupt priority bit 1 |
| G1IP1[1] | Group1 interrupt priority bit 1 |
| G0IP1[0] | Group0 interrupt priority bit 1 |

| | | Group x | |
|---|---|---|---|
| Level | Priority | IP1[GxIP1] | IP0 [GxIP0] |
| Level 0 | Lowest | 0 | 0 |
| Level 1 | | 0 | 1 |
| Level 2 | | 1 | 0 |
| Level 3 | Highest | 1 | 1 |
| x : 0~5 | | | |

# 16. 10-bit Analog-to-Digital Converter (ADC)

CGF082A provides 8 channels 10-bit ADC. The result of the conversion is provided at ADCD [9:0]. The ADC channel 0 and channel 1 are automatic conversion when IC is regarded as sensor-less FOC motor controller, then the ADC auto conversion The time point is related to the temporary register FOCCONT[2]. Under normal use, the timing diagram of ADC conversion is shown in Figure 16.1. and ADC SFR List Please refer to Table16.1.

| SFR | Description | address | Reset value |
|---|---|---|---|
| ADCCONT | ADC Control Register | C2H | 83H |
| ADCDLY | ADC Sample Delay (For CH0&CH1) | C5H | 33H |
| ADCSTR | ADC Start Convert and Setting Register | C1H | 00H |
| ADCD1 | ADC Data Register 1 | C3H | 00H |
| ADCD2 | ADC Data Register 2 | C4H | 00H |
| ADCOS_L | ADC1 Offset Value Register Low Byte | C9H | 00H |
| ADCOS_H | ADC1 Offset Value Register High Byte | CAH | 02H |

Table16.1 : ADC SFR List

## 16.1 ADCCONT (ADC Control Register)

When the ADC is used under normal circumstances, the conversion timing diagram is shown in Figure 16.1.1, in which the ADC input channel, ADC clock, ADC sample and hold time, and the 10-bit output data after the ADC conversion is completed (see Table 16.4.1) The order settings of the high and low bits are set in ADCCONT SFR (see Figure 16.1.1 and Table 16.1.1);
In addition, the ADC sample and hold clock is set in bit[7:6] (SHCKS) of the ADCSTR register (see Table 16.2.1). When all ADC parameters are set, fill in "1" to bit[0] of the ADCSTR register, and the ADC will start sampling and conversion.

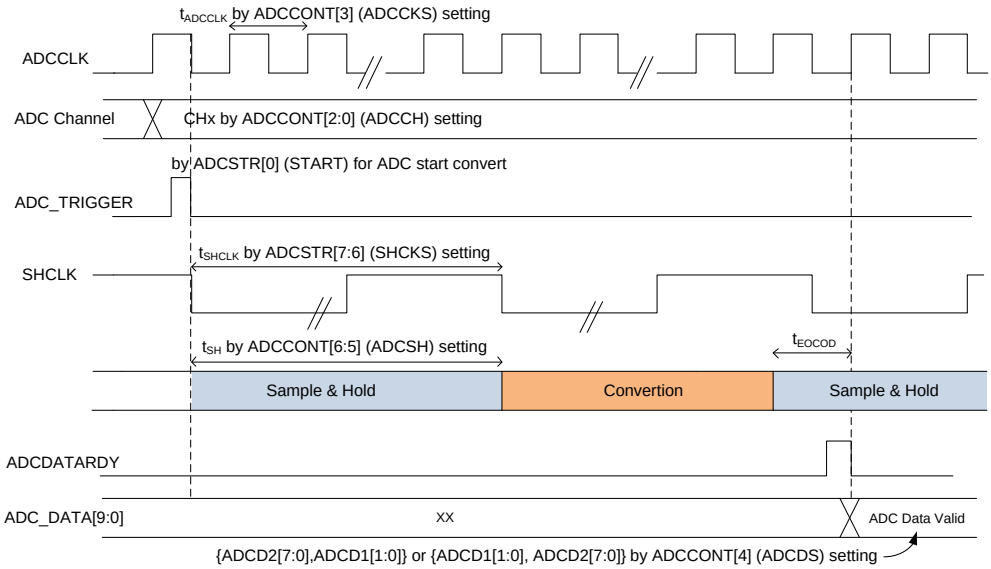


Figure 16.1.1 ADC conversion timing

| ADCCONT<br>ADC Control Register | | | | Address = C2H | | Reset Value = 0x80H | | |
|---|---|---|---|---|---|---|---|---|
| Bit | ADCPD | ADCSH[1:0] | | ADCDS | ADCCKS | ADDCH[2:0] | | |
| | 7 | 6 | 5 | 4 | 3 | 2 | 1 | 0 |
| Type | R/W | R/W | R/W | R/W | R/W | R/W | R/W | R/W |

| | |
|---|---|
| ADCPD<br>[7] | ADC power down control register :<br>0 : Normal<br>1 : Power down |
| ADCSH<br>[6:5] | ADC sample and hold time : (base on SHCLK)<br>00 : 1 clock<br>01 : 2 clock<br>10 : 3 clock<br>11 : 4 clock |
| ADCDS<br>[4] | ADC data select : |

| | MSB | 10 bit result | | LSB |
|---|---|---|---|---|
| 0 : | ADCD2[7:0] | | ADCD1.1 | ADCD1.0 |
| 1 : | ADCD1.1 | ADCD1.0 | ADCD2[7:0] | |

| | |
|---|---|
| ADCCKS<br>[3] | ADC conversion clock select : (ADCCLK)<br>0 : 24MHz<br>1 : 12MHz |
| ADCCH<br>[2:0] | ADC conversion channel select :<br>000 :CH0 100 :CH4<br>001 :CH1 101 :CH5<br>010 :CH2 110 :CH6<br>011 : CH3 111 : CH7 |

Table 16.1.1 ADC Control Register

## 16.2 ADCSTR (ADC Start Convert and Setting Register)

As mentioned in the previous section, under normal use of ADC, when all ADC parameters are set and "1" is filled in bit[0] of the ADCSTR register, the ADC will start sampling and conversion. Set in bit[5:4] (OPAGAIN, see Table16.2.1) of ADCSTR that only CH0 and CH1 can be amplified when used as a motor driver, and CH0 and CH1 are automatically converted into phase currents in sequence by the MDE hardware; ADC's CH2~CH7 can only be used after CH0 and CH1 are converted, and the OPAGAIN at this time is fixed at 1 times. The ADC CH0 and CH1 current sampling block diagram when used as a motor driver is shown in Figure 16.2.1.

ADCSTR Address = C1H Reset Value = 0x00H

ADC Start Convert and Setting Register

| Bit | SHCKS[1:0] | | OPAGAIN | | BUSY | ----- | | START |
|---|---|---|---|---|---|---|---|---|
| | 7 | 6 | 5 | 4 | 3 | 2 | 1 | 0 |
| Type | R/W | R/W | R/W | R/W | R | X | X | W |

| | | |
|---|---|---|
| SHCKS [7:6] | ADC sample and hold clock select : (SHCLK) | |
| | 00 : 6MHz | 10 : 2.4MHz |
| | 01 : 3MHz | 11 : 2MHz |
| OPAGAIN [5:4] | OPAmp Gain | |
| | 00 : 1 | 10 : 5 |
| | 01 : 2.5 | 11 : 10 |
| BUSY [3] | ADC conversion busy flag : | |
| | 0 : ADC conversion finish | |
| | 1 : ADC conversion busy | |
| START [0] | ADC start conversion register : (write 1 only) | |
| | 1 : ADC start conversion | |

Table 16.2.1 ADC Start Convert and Setting Register

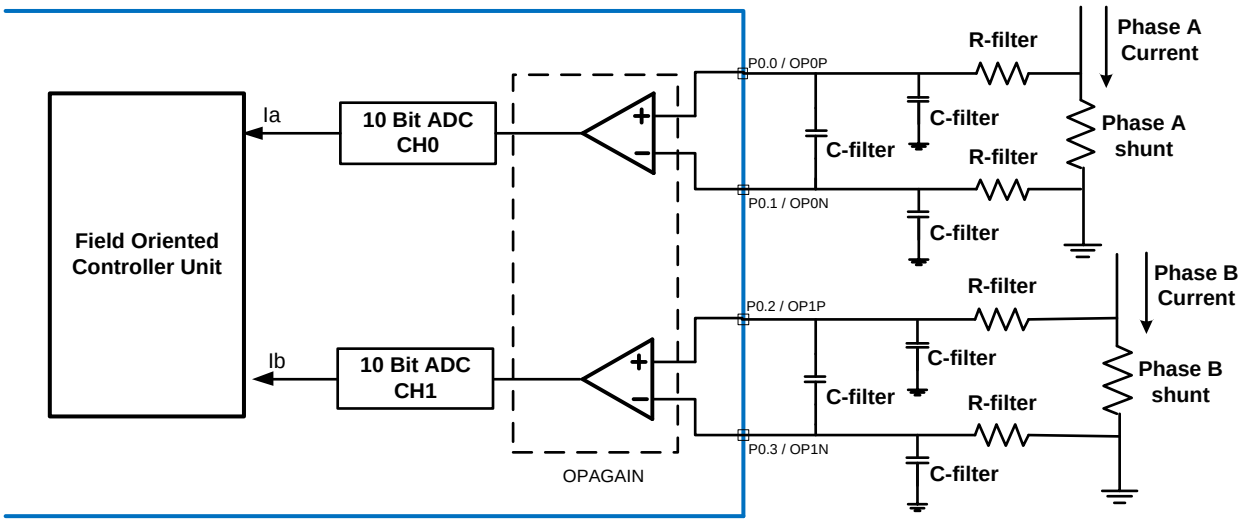


Figure 16.2.1 The block diagram of ADC CH0 and CH1 for Sensor-less FOC motor driving

## 16.3 ADCDLY (ADC Sample Delay Register )

The setting of the ADCDLY register is used for CH0 and CH1 of the motor drive. When switching the Power device, a spike current will occur. After setting the delay time in the ADCDLY SFR, the current sampling will be started when the current is stable. Therefore The setting of ADCDLY is the same as OPAGAIN and is only suitable for motor drive current sampling.

In addition, since the motor drive current sampling is automatically performed by MDE, the sampling time point can be set by bit[2] (ADCTRIG, see Table 16.3.2) of the FOCCONT register to be in the PWM counter The maximum value or 0 starts sampling after the setting time of ADCDLY.

After each current sampling of CH0 and CH1, MDE will issue an ADC interrupt. Using the ADC interrupt vector, the user can perform ADC conversion of other channels. The timing diagram of the entire ADC sampling is shown in Figure 16.3.1.

| ADCDLY<br>ADC Sample Delay | | | Address = C5H | | | Reset Value =0x33H | | |
|---|---|---|---|---|---|---|---|---|
| Bit | ADCDLY[7:0] | | | | | | | |
| | 7 | 6 | 5 | 4 | 3 | 2 | 1 | 0 |
| Type | W | W | W | W | W | W | W | W |

$$\text{ADC Sample delay time} = \frac{\text{ADCDLY}}{\text{PWM Frequency}}$$

Table 16.3.1 ADC Sample Delay Register

| FOCCONT<br>Field Oriented Control Register | | | Address = D6H | | Reset Value = 0x00H | |
|---|---|---|---|---|---|---|
| Bit | PI CLEAR | ESTCR | INV ADCD | ADCTRIG | PLLEN | SPEEDEN |
| | | | | 2 | | |
| Type | | | | R/W | | |

| | |
|---|---|
| ADCTRIG<br>[2] | ADC Trigger (Phase A and Phase B):<br>0: PWM counter max<br>1: PWM counter min |

Table16.3.2 : FOCCONT. ADCTRIG Description

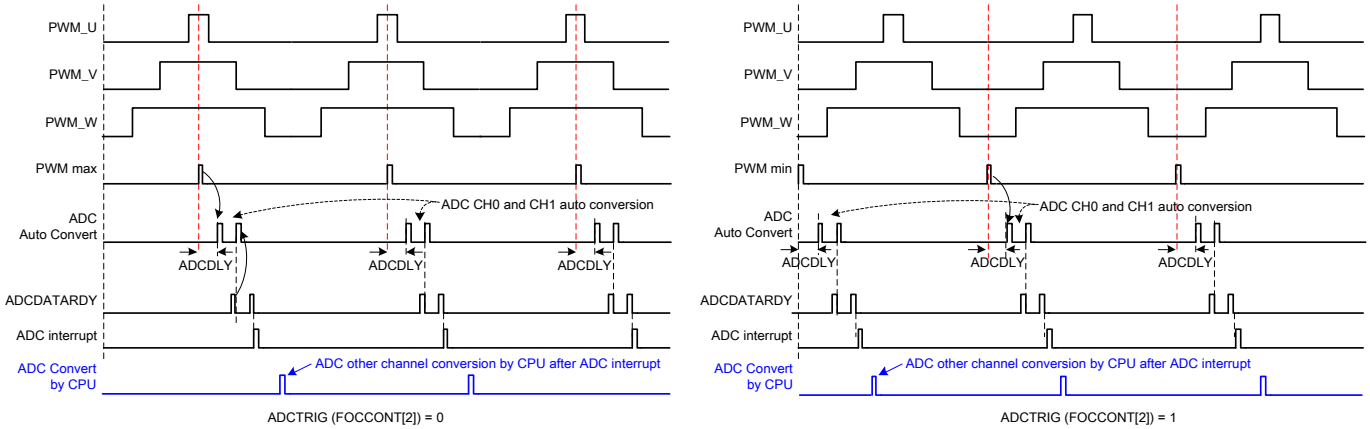


Figure 16.3.1 : The Timing Diagram of ADC Convert by MDE and CUP

## 16.4 ADC Data Register

The 10-bit data converted by the CH2~CH7 ADC will be placed in the ADCD1 and ADCD2 SFRs of Table 16.4.1 respectively. The arrangement is based on the setting of ADCCONT[4] (ADCDS, see Table 16.1.1). When ADCDS = 0, then ADC_DATA[9:0] = {ADCD2[7:0], ADCD1[1:0]}; when ADCDS = 1, then ADC_DATA[9:0] = { ADCD1[1:0 ], ADCD2[7:0]}.

| ADCD1 | Address = C3H | | | | | Reset Value = 0x00H | | |
|---|---|---|---|---|---|---|---|---|
| ADC Data Register1 | | | | | | | | |
| Bit | ADCD1 [1:0] | | | | | | | |
| | --- | --- | --- | --- | --- | --- | 1 | 0 |
| Type | R | R | R | R | R | R | R | R |

| ADCD2 | Address = C4H | | | | | Reset Value = 0x00H | | |
|---|---|---|---|---|---|---|---|---|
| ADC Data Register 2 | | | | | | | | |
| Bit | ADCD2 [7:0] | | | | | | | |
| | 7 | 6 | 5 | 4 | 3 | 2 | 1 | 0 |
| Type | R | R | R | R | R | R | R | R |

Table 16.4.1 ADC Data Register ADCD1 and ADCD2

## 16.5 ADC1 and ADC2 Offset Value Register

When sampling the motor driving current, MDE will automatically sample the two-phase current (ia and ib). If there is a fixed offset error between the sampled $i_a$ and $i_b$ and the actual measured current, CGF082A provides ia and ib each 10-bit offset correction (Table 16.5.1). Therefore, the actual ia current in the FOC operation is the CH0 sampling value + ADC1OS (Table 16.5.2); the actual $i_b$ current is the CH1 sampling value + ADC2OS (Table 16.5.3).

| SFR | Description | | Address |
|---|---|---|---|
| ADCOS_L | ADC Offset Value Register Low Byte | | C9H |
| ADCOS_H | ADC Offset Value Register High Byte | | CAH |
| | **Parameters** | **Description** | **Reset Value** |
| SFR_PAGE = 0 | ADCOS1[H,L] | ADC1 Offset Value | 0x0200H |
| SFR_PAGE = 1 | ADCOS2[H,L] | ADC2 Offset Value | 0x0200H |

Table 16.5.1 ADC Offset Register

ADC1OS_L Address = C9H (SFR_PAGE = 0) Reset Value =0x00H
ADC1Offset Value Register Low Byte

| Bit | ADC1OS[7:0] | | | | | | | |
|---|---|---|---|---|---|---|---|---|
| | 7 | 6 | 5 | 4 | 3 | 2 | 1 | 0 |
| Type | R/W | R/W | R/W | R/W | R/W | R/W | R/W | R/W |

ADC1OS_H Address = CAH (SFR_PAGE = 0) Reset Value = 0x02H
ADC1Offset Value Register High Byte

| Bit | ----- | | | | | | ADC1OS [9:8] | |
|---|---|---|---|---|---|---|---|---|
| | 7 | 6 | 5 | 4 | 3 | 2 | 1 | 0 |
| Type | ----- | ----- | ----- | ----- | ----- | ----- | R/W | R/W |

Table 16.5.2 Phase A Current ($i_a$) Offset Register

ADC2OS_L Address = C9H (SFR_PAGE = 1) Reset Value = 0x00H
ADC2Offset Value Register Low Byte

| Bit | ADC2OS[7:0] | | | | | | | |
|---|---|---|---|---|---|---|---|---|
| | 7 | 6 | 5 | 4 | 3 | 2 | 1 | 0 |
| Type | R/W | R/W | R/W | R/W | R/W | R/W | R/W | R/W |

ADC2OS_H Address = CAH (SFR_PAGE = 1) Reset Value = 0x02H
ADC2 Offset Value Register High Byte

| Bit | ----- | | | | | | ADC2OS [9:8] | |
|---|---|---|---|---|---|---|---|---|
| | 7 | 6 | 5 | 4 | 3 | 2 | 1 | 0 |
| Type | ----- | ----- | ----- | ----- | ----- | ----- | R/W | R/W |

Table 16.5.3 Phase B Current ($i_b$) Offset Register

# 17. EEPROM

CGF082A provides internal flash memory control signals that can perform byte read/write and page erase of the last 256 bytes of flash memory to simulate EEPROM as parameter storage. The read/write address, data, and command are control by EE_ADDR, EE_DATA, and EE_CMD register respectively which in the page of EEPROM SFR (Table 17.1). When performing an EEPROM erase, read or write command, you can first read the flag of the relevant command to confirm that the previous command has been completed before proceeding to the next command. The control flow of each command is shown in Figure 17.1. Please refer to Table17.1.1, Table17.2.1, and Table17.3.1 for each register.

| SFR | Description | | Address |
|---|---|---|---|
| EEPROM | EEPROM Function Register | | A3H |
| | **Parameters** | **Description** | **Reset Value** |
| SFR_PAGE = 0 | EE_ADDR | EEPROM read/write address | 0x00H |
| SFR_PAGE = 1 | EE_DATA | EEPROM read/write data | 0x00H |
| SFR_PAGE = 2 | EE_CMD | EEPROM command | 0x00H |

Table 17.1 EEPROM Register

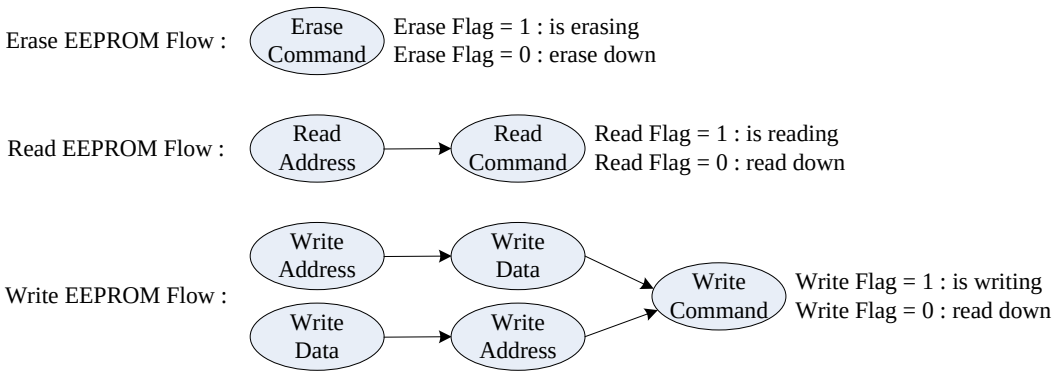


Figure 17.1 : EEPROM Erase, Read, and Write Control Flow

## 17.1 EE_ADDR (EEPROM Read/Write Address Register)

| EE_ADDR | Address = A3H (SFR_PAGE = 0) | | | | | Reset Value = 0x00H | | |
|---|---|---|---|---|---|---|---|---|
| EEPROM read/write address | | | | | | | | |
| Bit | EE_ADDR [7:0] | | | | | | | |
| Type | 7 | 6 | 5 | 4 | 3 | 2 | 1 | 0 |
| | R/W | R/W | R/W | R/W | R/W | R/W | R/W | R/W |

Table 17.1.1 EEPROM Read/Write Address Register

## 17.2 EE_DATA (EEPROM Read/Write Data Register)

| EE_DATA | Address = A3H (SFR_PAGE = 1) | | | | | Reset Value = 0x00H | | |
|---|---|---|---|---|---|---|---|---|
| EEPROM read/write data | | | | | | | | |
| Bit | EE_DATA [7:0] | | | | | | | |
| Type | 7 | 6 | 5 | 4 | 3 | 2 | 1 | 0 |
| | R/W | R/W | R/W | R/W | R/W | R/W | R/W | R/W |

Table 17.2.1 EEPROM Read/Write Data Register

## 17.3 EE_CMD (EEPROM Command Register)

| EE_CMD | Address = A3H (SFR_PAGE = 2) | | | | | Reset Value = 0x00H | | |
|---|---|---|---|---|---|---|---|---|
| EEPROM command | | | | | | | | |
| Bit | EE_CMD [7:0] | | | | | | | |
| | ERS_FLAG | --- | WR_FLAG | RD_FLAG | ERASE | --- | WR_CMD | RD_CMD |
| Bit | 7 | 6 | 5 | 4 | 3 | 2 | 1 | 0 |
| Type | R/W | --- | R/W | R/W | R/W | --- | R/W | R/W |

| | |
|---|---|
| ERS_FLAG<br>[7] | EEPROM ERASE Flag:<br>1 : EEPROM Erase progressing |
| WR_FLAG<br>[5] | EEPROM WRITE Flag:<br>1 : EEPROM Write progressing |
| RD_FLAG<br>[4] | EEPROM READ Flag:<br>1 : EEPROM Read progressing |
| ERASE<br>[3] | EERPOM ERASE:<br>1 : ERASE command |
| WR_CMD<br>[1] | EERPOM WRITE command:<br>1 : WRITE command |
| RD_CMD<br>[0] | EERPOM READ command:<br>1 : READ command |

Table 17.3.1 EEPROM Command Register

# 18. IIC Emulation

The IIC module uses the SCL (clock) and the SDA (data) line to communicate with external IIC interface. Its speed can be selected to 400Kbps (maximum) by software setting the IICBR [2:0] control bit. The IIC module provided 2 interrupts (RXIF, TXIF). It will generate START, repeated START and STOP signals automatically in master mode and can detects START, repeated START and STOP signals in slave mode. The maximum communication length and the number of devices that can be connected are limited by a maximum bus capacitance of 400pF. The IIC interrupt vector is 63h. IIC SFR List Please refer to Table18.1.

| SFR | Description | Address | Reset value |
|---|---|---|---|
| IICS | IIC Status Register | E8H | 00H |
| IICCTRL | IIC Control Register | E9H | 04H |
| IICA1 | IIC Address 1 Register | EAH | A0H |
| IICA2 | IIC Address 2 Register | EBH | 60H |
| IICRWD | IIC Read Write Register | BAH | 00H |
| IICEBT | IIC Enable Bus Transaction Register | 9CH | 00H |

Table 18.1 : IIC SFR List

## 18.1 IICCTL (IIC Control Register)

IICCTL Address = E9H Reset Value = 0x04H

IIC Control Register

| Bit | IICEN | MSS | MAS | AB_EN | BF_EN | IICBR[2:0] | | |
|---|---|---|---|---|---|---|---|---|
| | 7 | 6 | 5 | 4 | 3 | 2 | 1 | 0 |
| Type | R/W | R/W | R/W | R/W | R/W | R/W | R/W | R/W |

| | |
|---|---|
| IICEN<br>[7] | Enable IIC module<br>0 : Disable<br>1 : Enable |
| MSS<br>[6] | Master or slave mode select<br>0 : slave mode<br>1 : master mode<br>*The software must set this bit before setting others register. |
| MAS<br>[5] | Master address select (master mode only)<br>0 : Master address is to use IICA1<br>1 : Master address is to use IICA2 |
| AB_EN<br>[4] | Arbitration lost enable bit. (Master mode only)<br>If set AB_EN bit, the hardware will check arbitration lost. Once arbitration lost occurred, hardware will return to IDLE state. If this bit is cleared, hardware will not care arbitration lost condition. Set this bit when multi-master and slave connection. Clear this bit when single master to single slave. |
| BF_EN<br>[3] | Bus busy enable bit. (Master mode only)<br>If set BF_EN bit, hardware will not generate a start condition to bus until BF=0. Clear this bit will always generate a start condition to bus when MStart is set. Set this bit when multi-master and slave connection. Clear this bit when single master to single slave. |
| IICBR<br>[2:0] | Baud rate selection (master mode only) , where Fosc is 12MHz<br>000 : Fosc/32 100 : Fosc/512<br>001 : Fosc/64 101 : Fosc/1024<br>010 : Fosc/128 110 : Fosc/2048<br>011 : Fosc/256 111 : Fosc/4096 |

## 18.2 IICS (IIC Status Register)

IICS — Address = E8H — Reset Value = 0x00H

IIC Status Register

| Bit | --- | MPIF | LAIF | RXIF | TXIF | RXAK | TXAK | RW or BB |
|---|---|---|---|---|---|---|---|---|
| | 7 | 6 | 5 | 4 | 3 | 2 | 1 | 0 |
| Type | --- | R/W | R/W | R/W | R/W | R/W | R/W | R/W |

| | |
|---|---|
| MPIF<br>[6] | The Stop condition Interrupt Flag<br>The stop condition occurred and this bit will be set. Software need to clear this bit. |
| LAIF<br>[5] | Arbitration lost bit. (Master mode only)<br>The Arbitration Interrupt Flag, the bus arbitration lost occurred and this bit will be set. Software need to clear this bit. |
| RXIF<br>[4] | The data Receive Interrupt Flag<br>RXIF is set after the IICRWD (IIC Read Write Data Buffer) is loaded with a newly receive data. |
| TXIF<br>[3] | The data Transmit Interrupt Flag<br>TXIF is set when the data of the IICRWD (IIC Read Write Data Buffer) is downloaded to the shift register. |
| RXAK<br>[2] | The Acknowledge Status indicate bit<br>When clear, it means an acknowledge signal has been received after the complete 8 bits data transmit on the bus. |
| TXAK<br>[1] | The Acknowledge status transmit bit (Figure 18.2.1)<br>When received complete 8 bits data, this bit will set (NoAck) or clear (Ack) and transmit to master to indicate the receive status. |
| RW or BB<br>[0] | Bus busy or slave mode read/write on the IIC bus<br>**Master Mode:**<br>BB : Bus busy bit<br>If detect scl=0 or sda=0 or bus start, this bit will be set. If detect stop, this bit will be cleared. This bit can be cleared by software to return ready state.<br>**Slave Mode:**<br>RW : The slave mode read (received) or wrote (transmit) on the IIC bus. When this bit is clear, the slave module received data on the IIC bus (SDA).(Slave mode only). |

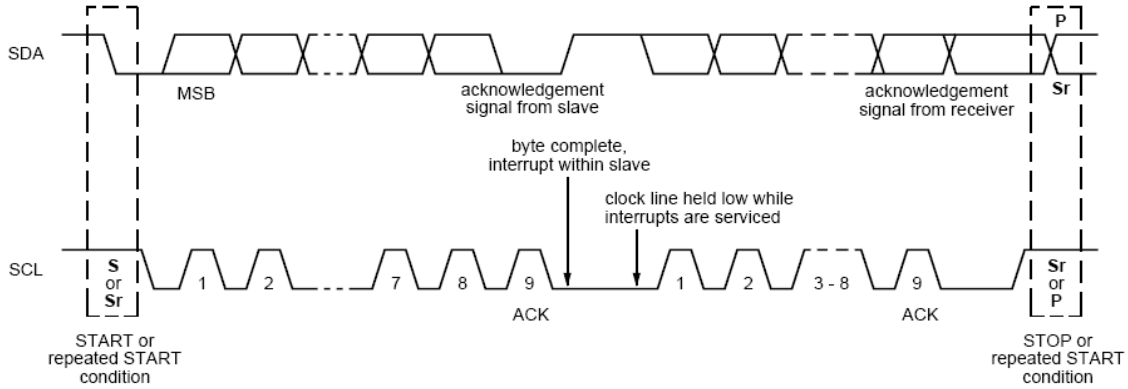


Figure 18.2.1 : Acknowledgement bit in the 9th bit of a byte transmission

## 18.3 IICA1 (IIC Address1 Register)

| IICA1 | Address = EAH | Reset Value = 0xA0H |
|---|---|---|

IIC Address1 Register

| Bit | IICA1 | | | | | | | Match1 or RW1 |
|---|---|---|---|---|---|---|---|---|
| | 7 | 6 | 5 | 4 | 3 | 2 | 1 | 0 |
| Type | R/W | | | | | | | R or R/W |

| | |
|---|---|
| **Slave mode** | |
| IICA1 | IIC Address1 registers |
| [7:1] | This is the first 7-bit address for this slave module. It will be checked when an address (from master) is received. |
| Match1 | IICA1 match bit (Read only) |
| [0] | When IICA1 matches with the received address from the master side, this bit will set to 1 by hardware. When IIC bus gets first data, this bit will clear. |
| **Master mode** | |
| IICA1 | IIC Address1 registers |
| [7:1] | This 7-bit address indicates the slave with which it wants to communicate. |
| RW1 | Master read/write mode indicate |
| [0] | This bit will be sent out as RW of the slave side if the module has set the MStart or RStart bit. It appears at the 8th bit after the IIC address as below figure (Figure18.3.1). It is used to tell the salve the direction of the following communication. If it is 1, the module is in master receive mode. If 0, the module is in master transmit mode. The Fig. as shown as follow.<br>RW1=1, master receive mode<br>RW1=0, master transmit mode |

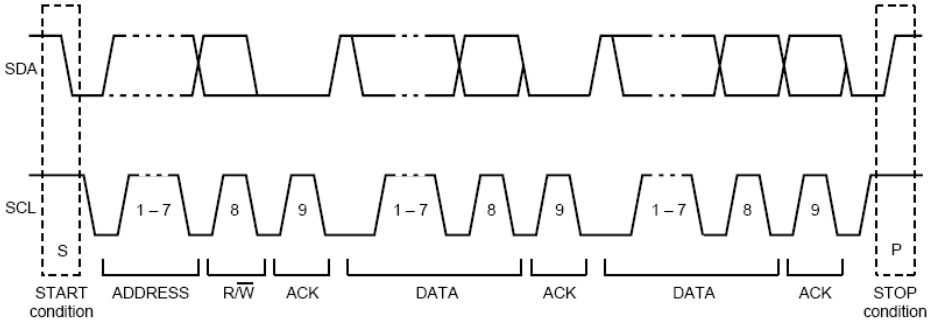


Figure 18.3.1 **:** RW bit in the 8th bit after IIC address

## 18.4 IICA2 (IIC Address2 Register)

IICA2 Address = EBH Reset Value = 0x60H

IIC Address 2 Register

| Bit | 7 | 6 | 5 | 4 | 3 | 2 | 1 | 0 |
|---|---|---|---|---|---|---|---|---|
| | IICA2 | | | | | | | Match2 or RW2 |
| Type | R/W | | | | | | | R or R/W |

**Slave mode**

| | |
|---|---|
| IICA2 | IIC Address2 registers |
| [7:1] | This is the second 7-bit address for this slave module. It will be checked when an address (from master) is received. |
| Match2 | IICA2 match bit (Read only) |
| [0] | When IICA2 matches with the received address from the master side, this bit will set to 1 by hardware. When IIC bus gets first data, this bit will clear. |

**Master mode**

| | |
|---|---|
| IICA2 | IIC Address2 registers |
| [7:1] | This 7-bit address indicates the slave with which it wants to communicate. |
| RW2 | Master read/write mode indicate |
| [0] | This bit will be sent out as RW of the slave side if the module has set the MStart or RStart bit. It is used to tell the salve the direction of the following communication. If it is 1, the module is in master receive mode. If 0, the module is in master transmit mode.<br>RW2=1, master receive mode<br>RW2=0, master transmit mode |

## 18.5 IICRWD (IIC Read Write Data Register)

IICRWD Address = BAH Reset Value = 0x00H

IIC Read Write Register

| Bit | 7 | 6 | 5 | 4 | 3 | 2 | 1 | 0 |
|---|---|---|---|---|---|---|---|---|
| | IICRWD | | | | | | | |
| Type | R/W | | | | | | | |

| | |
|---|---|
| IICRWD | IIC read write data buffer |
| [7:0] | In receiving (read) mode, the received byte is stored here.<br>In transmitting mode, the byte to be shifted out through SDA stays here. |

## 18.6 IICEBT (IIC Enable Transaction Register)

IICEBT Address = 9CH Reset Value = 0x00H

IIC Enable Transaction Register

| Bit | FU_EN | | --- | --- | --- | --- | --- | --- |
|---|---|---|---|---|---|---|---|---|
| | 7 | 6 | 5 | 4 | 3 | 2 | 1 | 0 |
| Type | R/W | | --- | --- | --- | --- | --- | --- |

**Master mode**

[7:6] Function Enable

00 : reserved

01 : IIC bus module will enable read/write data transfer on SDA and SCL

10 : IIC bus module generate a start condition on the SDA/SCL, then send out address which is stored in the IICA1/IICA2(selected by MAS control bit)

11 : IIC bus module generates a stop condition on the SDA/SCL.

Notice : 1. FU_EN[7:6] will be auto-clear by hardware, so setting FU_EN[7:6] repeatedly is necessary.

**Slave mode**

[7:6] Function Enable

01 : FU_EN[7:6] should be set as 01 only. The other value is inhibited.

Notice :
1. FU_EN[7:6] should be set as 01 before read/write data transfer for bus release; otherwise, SCL will be locked(pull low).
2. FU_EN[7:6] should be set as 01 after read/write data transfer for receiving a stop condition from bus master.
3. In transmit data mode(slave mode), the output data should be filled into IICRWD before setting FU_EN[7:6] as 01.
4. FU_EN[7:6] will be auto-clear by hardware, so setting FU_EN[7:6] repeatedly is necessary.

# 19. Capture

CGF082A provides external and internal signal capture function that can count the high level length (CAPH_H, CAPH_L) and the period length (CAPT_H, CAPT_L) of the external and internal signal (Table 19.1). This interrupt is a combination of external signal capture interrupt and internal signal capture interrupt, which will be issued after the rising edge of the external or internal capture signal. User must to monitor the external capture OK (ECAP_OK) and internal capture OK (ICAP_OK) in the capture interrupt routine to distinguish which counter can access, and it is cleared by user when set the clear capture OK flag (ECAP_OK_CLR or ICAP_OK_CLR) bit "1". The external and internal capture counter are share same SFR but separate in different page (Table 19.2).

| SFR | Description | Address | Reset value |
|---|---|---|---|
| CAPCONT | Capture Control Register | DDH | 03H |
| Capture Total Count: | | | |
| CAPT_L | Capture Total Count Low | D9H | 00H |
| CAPT_H | Capture Total Count High | DAH | 00H |
| Capture Count: | | | |
| CAPH_L | Capture High-level Count Low | DBH | 00H |
| CAPH_H | Capture High-level Count High | DCH | 00H |

Table 19.1 : Capture SFR List

| **SFR** | **Description** | | **Address** |
|---|---|---|---|
| CAPCONT | Capture Control Register | | DDH |
| | **Parameters** | **Description** | **Reset Value** |
| SFR_PAGE = 0 | EXT_CAPCONT | External Control Register | 0x03H |
| SFR_PAGE = 1 | INT_CAPCONT | Internal Control Register | 0x03H |
| | | | |
| **SFR** | **Description** | | **Address** |
| CAPT_L | Capture Total Count Register Low Byte | | D9H |
| CAPT_H | Capture Total Count Register High Byte | | DAH |
| | **Parameters** | **Description** | **Reset Value** |
| SFR_PAGE = 0 | EXT_CAPT[H,L] | External Capture Total Count Register | 0x0000H |
| SFR_PAGE = 1 | INT_CAPT[H,L] | Internal Capture Total Count Register | 0x0000H |
| | | | |
| **SFR** | **Description** | | **Address** |
| CAPH_L | Capture High-level Count Register Low Byte | | DBH |
| CAPH_H | Capture High-level Count Register High Byte | | DCH |
| | **Parameters** | **Description** | **Reset Value** |
| SFR_PAGE = 0 | EXT_CAPH[H,L] | External Capture High-level Count Register | 0x0000H |
| SFR_PAGE = 1 | INT_CAPH[H,L] | Internal Capture High-level Count Register | 0x0000H |

Table 19.2 : Capture Counter SFR

## 19.1 External Capture

External capture input can be selected from CAP1 or CAP2, and the setting method is as shown in bit [4] (CAPPINSEL) in the table below. In addition, the clock frequency for counting the capture signal can be selected according to the cycle length of the input signal (set by ECAPCKS in Table 19.1.1), which can avoid overflow in the internal counter and cause distortion of the high level length and cycle length of the capture signal. When the capture of the external signal is completed, an interrupt will be issued and the ECAP_OK flag will be set to "1". The user must write "1" to ECAP_OK_CLR to clear the ECAP_OK flag to "0" (Figure 19.1.1).

### 19.1.1 EXT_CAPCONT (External Capture Control Register)

EXT_CAPCONT Address = DDH (SFR_PAGE = 0) Reset Value = 0x03H

External Capture Control Register

| | ECAP_EN | ECAP_OK | ----- | CAPPINSEL | ECAP_OK_CLR | ECAPCKS[2:0] | | |
|---|---|---|---|---|---|---|---|---|
| Bit | 7 | 6 | 5 | 4 | 3 | 2 | 1 | 0 |
| Type | R/W | R/W | X | R/W | W | R/W | R/W | R/W |

| | |
|---|---|
| ECAP_EN<br>[7] | External Capture Enable :<br>0 : External Capture Disable<br>1: External Capture Enable |
| ECAP_OK<br>[6] | External Capture OK :<br>0 : External signal is capturing<br>1: External signal capture down, clear by write “1” in **ECAP_OK_CLR** |
| CAPPINSEL<br>[4] | Capture input pin select :<br>0 : CAP2(P0.7)<br>1: CAP1(P0.6) |
| ECAP_OK_CLK<br>[3] | External Capture OK Clear :<br>Write “1” to clear the **ECAP_OK** bit |
| ECAPCKS<br>[2:0] | External Capture Clock Select :<br>000 : 48MHz/4 100 : 48MHz/64<br>001 : 48MHz/8 101 : 48MHz/128<br>010 : 48MHz/16 110 : 48MHz/256<br>011 : 48MHz/32 111 : 48MHz/512 |

Table 19.1.1 : External Capture Control Register

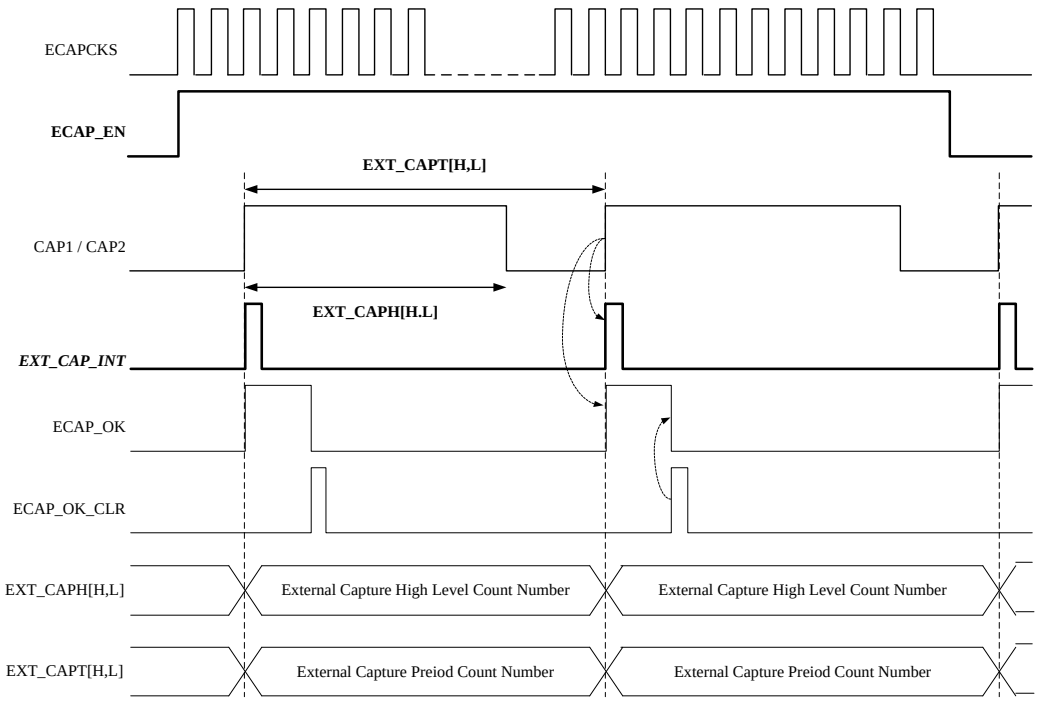


Figure 19.1.1 : The Waveform Sequence of External Capture

### 19.1.2 EXT_CAPT (External Capture Total Count)

When an external capture interrupt occurs, in addition to the External Capture Total Count being updated to the latest capture count value, it will also re-count the new capture cycle length. The timing is shown in Figure 19.1.1.

| EXT_CAPT_L | Address = D9H (SFR_PAGE=0) | Reset Value = 0x00H |
|---|---|---|

External Capture Total Count Low

| Bit | EXT_CAPT[7:0] | | | | | | | |
|---|---|---|---|---|---|---|---|---|
| | 7 | 6 | 5 | 4 | 3 | 2 | 1 | 0 |
| Type | R | R | R | R | R | R | R | R |

| EXT_CAPT_H | Address = DAH (SFR_PAGE=0) | Reset Value = 0x00H |
|---|---|---|

External Capture Total Count High

| Bit | EXT_CAPT[15:8] | | | | | | | |
|---|---|---|---|---|---|---|---|---|
| | 7 | 6 | 5 | 4 | 3 | 2 | 1 | 0 |
| Type | R | R | R | R | R | R | R | R |

### 19.1.3 EXT_CAPH (External Capture High-Level Count)

The value of External Capture High-Level Count will be temporarily stored when the capture signal changes from "High" to "Low". When the capture interrupt occurs, it will be updated to the latest value at the same time as the External Capture Total Count. The timing is shown in Figure 19.1.1.

| EXT_CAPH_L | Address = DBH (SFR_PAGE=0) | Reset Value = 0x00H |
|---|---|---|

External Capture High-level Count Low

| Bit | EXT_CAPH[7:0] | | | | | | | |
|---|---|---|---|---|---|---|---|---|
| | 7 | 6 | 5 | 4 | 3 | 2 | 1 | 0 |
| Type | R | R | R | R | R | R | R | R |

| EXT_CAPH_H | Address = DCH (SFR_PAGE=0) | Reset Value = 0x00H |
|---|---|---|

External Capture High-level Count High

| Bit | EXT_CAPH[15:8] | | | | | | | |
|---|---|---|---|---|---|---|---|---|
| | 7 | 6 | 5 | 4 | 3 | 2 | 1 | 0 |
| Type | R | R | R | R | R | R | R | R |

## 19.2 Internal Capture

Internal capture input data is from INT_CAPCONT (Table 19.2.1), and the setting method is as shown in bit [4] (IN_CAP_IN) in the table below. In addition, the clock frequency for counting the capture signal can be selected according to the cycle length of the input signal (set by ICAPCKS in Table 19.2.1), which can avoid overflow in the internal counter and cause distortion of the high level length and cycle length of the capture signal. When the capture of the internal signal is completed, an interrupt will be issued and the ICAP_OK flag will be set to "1". The user must write "1" to ICAP_OK_CLR to clear the ICAP_OK flag to "0" (Figure 19.2.1).

### 19.2.1 INT_CAPCONT (Internal Capture Control Register)

INT_CAPCONT Address = DDH (SFR_PAGE = 1) Reset Value = 0x03H

Internal Capture Control Register

| | ICAP_EN | ICAP_OK | ----- | INT_CAP_IN | ICAP_OK_CLR | ICAPCKS[2:0] | | |
|---|---|---|---|---|---|---|---|---|
| Bit | 7 | 6 | 5 | 4 | 3 | 2 | 1 | 0 |
| Type | R/W | R/W | X | R/W | W | R/W | R/W | R/W |

| | |
|---|---|
| ICAP_EN<br>[7] | Internal Capture Enable :<br>0 : Internal Capture Disable<br>1: Internal Capture Enable |
| ICAP_OK<br>[6] | Internal Capture OK :<br>0 : Internal signal is capturing<br>1: Internal signal capture down, clear by write “1” in **ICAP_OK_CLR** |
| INT_CAP_IN<br>[4] | Internal Capture input Data :<br>0 : Data “0” input<br>1: Data “1” input |
| ICAP_OK_CLK<br>[3] | Internal Capture OK Clear :<br>Write “1” to clear the **ICAP_OK** bit |
| ICAPCKS<br>[2:0] | Internal Capture Clock Select :<br>000 : 48MHz/4 100 : 48MHz/64<br>001 : 48MHz/8 101 : 48MHz/128<br>010 : 48MHz/16 110 : 48MHz/256<br>011 : 48MHz/32 111 : 48MHz/512 |

Table 19.2.1 : Internal Capture Control Register

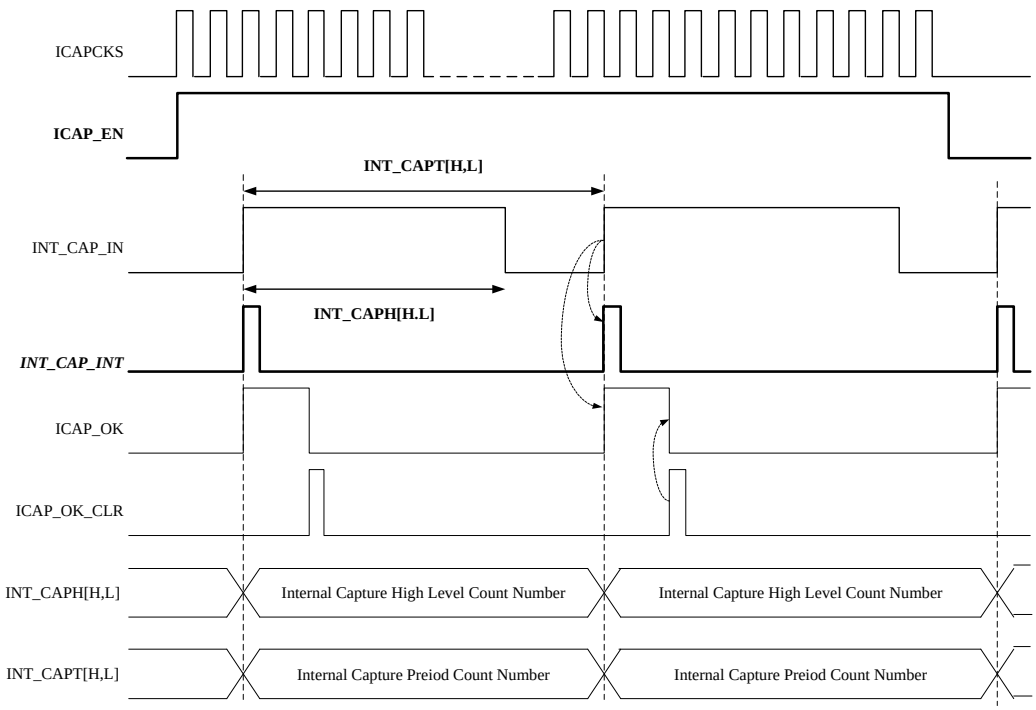


Figure 19.2.1 : The Waveform Sequence of Internal Capture

### 19.2.2 INT_CAPT (Internal Capture Total Count)

When an internal capture interrupt occurs, in addition to the Internal Capture Total Count being updated to the latest capture count value, it will also re-count the new capture cycle length. The timing is shown in Figure 19.2.1.

| INT_CAPT_L | Address = D9H (SFR_PAGE=1) | Reset Value = 0x00H |
|---|---|---|

Internal Capture Total Count Low

| Bit | INT_CAPT[7:0] | | | | | | | |
|---|---|---|---|---|---|---|---|---|
| | 7 | 6 | 5 | 4 | 3 | 2 | 1 | 0 |
| Type | R | R | R | R | R | R | R | R |

| INT_CAPT_H | Address = DAH (SFR_PAGE=1) | Reset Value = 0x00H |
|---|---|---|

Internal Capture Total Count High

| Bit | INT_CAPT[15:8] | | | | | | | |
|---|---|---|---|---|---|---|---|---|
| | 7 | 6 | 5 | 4 | 3 | 2 | 1 | 0 |
| Type | R | R | R | R | R | R | R | R |

### 19.2.3 INT_CAPH (Internal Capture High-Level Count)

The value of Internal Capture High-Level Count will be temporarily stored when the capture signal changes from "High" to "Low". When the capture interrupt occurs, it will be updated to the latest value at the same time as the Internal Capture Total Count. The timing is shown in Figure 19.2.1.

| INT_CAPH_L | Address = DBH (SFR_PAGE=1) | Reset Value = 0x00H |
|---|---|---|

Internal Capture High-level Count Low

| Bit | INT_CAPH[7:0] | | | | | | | |
|---|---|---|---|---|---|---|---|---|
| | 7 | 6 | 5 | 4 | 3 | 2 | 1 | 0 |
| Type | R | R | R | R | R | R | R | R |

| INT_CAPH_H | Address = DCH (SFR_PAGE=1) | Reset Value = 0x00H |
|---|---|---|

Internal Capture High-level Count High

| Bit | INT_CAPH[15:8] | | | | | | | |
|---|---|---|---|---|---|---|---|---|
| | 7 | 6 | 5 | 4 | 3 | 2 | 1 | 0 |
| Type | R | R | R | R | R | R | R | R |

# 20. Multiplication and Division Unit (MDU)

The MDU is an on-chip arithmetic co-processor which enables the CGF082A to perform additional extended arithmetic operations. All operations are singed/unsigned integer operations. Operands and results are stored in MD0–MD5 registers. The module is controlled by the MD_MODE and MD_CONT register. Any calculation of the MDU overwrites its operands. The MDU support five operations: Division 32-bit/16-bit, Division 16-bit/16-bit, Multiplication, Shift and Normalize.

| SFR | Description | address | Reset value |
|---|---|---|---|
| MD_MODE | MDU Mode Control Register | 1030H | 10H |
| MD_CONT | MDU Control Register | 1031H | 00H |
| MD0 | Multiplication Division Register 0 | 1032H | 00H |
| MD1 | Multiplication Division Register 1 | 1033H | 00H |
| MD2 | Multiplication Division Register 2 | 1034H | 00H |
| MD3 | Multiplication Division Register 3 | 1035H | 00H |
| MD4 | Multiplication Division Register 4 | 1036H | 00H |
| MD5 | Multiplication Division Register 5 | 1037H | 00H |

## 20.1 MD_MODE (MDU Control Mode)

MD_MODE Address = ACH Reset Value = 0x10H

MDU Mode Control Register

| Bit | ----- | ----- | ----- | MDUF | ----- | ----- | MDUS | ---- |
|---|---|---|---|---|---|---|---|---|
| | 7 | 6 | 5 | 4 | 3 | 2 | 1 | 0 |
| Type | X | X | X | R | X | X | R/W | X |

| | |
|---|---|
| MDUF<br>[4] | MDU finish flag :<br>0 : MDU busy.<br>1 : MDU calculation finished. |
| MDUS<br>[1] | MDU Signed select :<br>0 :Signed calculation.<br>1 :Unsigned calculation. |

## 20.2 MD_CONT (MDU Control Register)

| MD_CONT<br>MDU Control Register | | | Address = ADH | | | Reset Value = 0x10H | | |
|---|---|---|---|---|---|---|---|---|
| Bit | MDEF | MDOV | SLR | SC[4:0] | | | | |
| | 7 | 6 | 5 | 4 | 3 | 2 | 1 | 0 |
| Type | R | R | R/W | R/W | R/W | R/W | R/W | R/W |

| | |
|---|---|
| MDEF<br>[7] | MDU Error flag :<br>Indicates an improperly performed operation (when one of the arithmetic operations has been restarted or interrupted by a new operation). |
| MDOV<br>[6] | MDU Overflow flag :<br>Overflow occurrence in the MDU operation. |
| SLR<br>[5] | Shift direction :<br>0 : shift left operation<br>1 : shift right operation |
| SC<br>[4:0] | Shift counter :<br>When set to all ‘0‘s, normalize operation is selected. After normalization, the SC[4:0] contain the number of normalizing shifts performed.<br>When at least one of these bit is set high shift operation is selected. The number of shifts performed is determined by the number written to SC[4:0], where SC.4 is the MSB. |

### 20.2.1 MDEF

The MDEF error flag indicates an improperly performed operation (when one of the arithmetic operations has been restarted or interrupted by a new operation). The error flag mechanism is automatically enabled with the first write operation to MD0and disabled with the final read instruction from MD3(multiplication or shift/norm) or MD5 (division) in phase three.

The error flag is set when:

There is a write access to MDx registers (any of MD0-MD5 and MD_CONT) during phase two of MDU operation (restart or calculations interrupting) There is a read access to one of MDx registers during phase two of MDU operation when the error flag mechanism is enabled. In such condition error flag is set but the calculation is not interrupted. The error flag is reset only after read access to MD_CONT register. The error flag is read only.

### 20.2.2 MDOV

The MDOV overflow flag is set when one of the following conditions occurs: Division by zero
Multiplication with a result greater than FFFFH
Start of normalizing if the ('MD3.7' ='1') most significant bit of MD3 is set
Any operation of the MDU that does not match the above conditions clears the overflow flag. Note that the overflow flag is exclusively controlled by hardware. It cannot be written.

## 20.3 MD0 – MD5 (Multiplication Division Register)

| MD0 Multiplication Division Register 0 | Address = AEH | | | | | Reset Value = 0x00H | | |
|---|---|---|---|---|---|---|---|---|
| Bit | MD0[7:0] | | | | | | | |
| | 7 | 6 | 5 | 4 | 3 | 2 | 1 | 0 |
| Type | R/W | R/W | R/W | R/W | R/W | R/W | R/W | R/W |

| MD1 Multiplication Division Register 1 | Address = AFH | | | | | Reset Value = 0x00H | | |
|---|---|---|---|---|---|---|---|---|
| Bit | MD1[7:0] | | | | | | | |
| | 7 | 6 | 5 | 4 | 3 | 2 | 1 | 0 |
| Type | R/W | R/W | R/W | R/W | R/W | R/W | R/W | R/W |

| MD2 Multiplication Division Register 2 | Address = B1H | | | | | Reset Value = 0x00H | | |
|---|---|---|---|---|---|---|---|---|
| Bit | MD2[7:0] | | | | | | | |
| | 7 | 6 | 5 | 4 | 3 | 2 | 1 | 0 |
| Type | R/W | R/W | R/W | R/W | R/W | R/W | R/W | R/W |

| MD3 Multiplication Division Register 3 | Address = B2H | | | | | Reset Value = 0x00H | | |
|---|---|---|---|---|---|---|---|---|
| Bit | MD3[7:0] | | | | | | | |
| | 7 | 6 | 5 | 4 | 3 | 2 | 1 | 0 |
| Type | R/W | R/W | R/W | R/W | R/W | R/W | R/W | R/W |

| MD4 Multiplication Division Register 4 | Address = B3H | | | | | Reset Value = 0x00H | | |
|---|---|---|---|---|---|---|---|---|
| Bit | MD4[7:0] | | | | | | | |
| | 7 | 6 | 5 | 4 | 3 | 2 | 1 | 0 |
| Type | R/W | R/W | R/W | R/W | R/W | R/W | R/W | R/W |

| MD5 Multiplication Division Register 5 | Address = BAH | | | | | Reset Value = 0x00H | | |
|---|---|---|---|---|---|---|---|---|
| Bit | MD5[7:0] | | | | | | | |
| | 7 | 6 | 5 | 4 | 3 | 2 | 1 | 0 |
| Type | R/W | R/W | R/W | R/W | R/W | R/W | R/W | R/W |

## 20.4 MDU Operation Description

The operation of the MDU consists of three phases:

### 20.4.1 Loading the MDx registers

The type of calculation the MDU has to perform is selected by the order in which the MDx registers are written to. A write to MD0 is the first transfer to be done in any case. Next writes must be done as shown in the table below to determine the MDU operation. The last write will start the selected operation.

| Operation | 32-bit/16-bit | 16-bit/-16bit | 16-bit x 16-bit | Shift/ normalizing |
|---|---|---|---|---|
| First write | MD0<br>Dividend Low | MD0<br>Dividend Low | MD0<br>Multiplicand Low | MD0<br>LSB |
| | MD1<br>Dividend | MD1<br>Dividend High | MD4<br>Multiplicator Low | MD1 |
| | MD2<br>Dividend | | MD1<br>Multiplicand High | MD2 |
| | MD3<br>Dividend High | | | MD3<br>MSB |
| | MD4<br>Divisor Low | MD4<br>Divisor Low | | |
| Last write | MD5<br>Divisor High | MD5<br>Divisor High | MD5<br>MultiplicatorHigh | MD_CONT<br>start conversion |

### 20.4.2 Executing calculation

During the calculation period, the MDU works in parallel to the CPU. When the calculation is complete, the hardware will set the MDUF bit to one (MDUF = ‘1’). The flag will be cleared at the next calculation.

The following table provides the execution time for each mathematical operation.

| Operation | Number of clock cycles | |
|---|---|---|
| Division 32-bit/16-bit | 17 clock cycles | |
| Division 16-bit/16-bit | 9 clock cycles | |
| Multiplication | 11 clock cycles | |
| Shift | Min 3 clock cycles<br>(SC = 01H) | Max 18 clock cycles<br>(SC = 1FH) |
| Normalize | Min 4 clock cycles<br>(SC <= 01H) | Max 19 clock cycles<br>(SC = 1FH) |

### 20.4.3 Reading the result from the MDx registers

The Read-out sequence of the first “MDx” registers is not critical but the last read determines the end of a whole calculation.

| Operation | 32-bit/16-bit | 16-bit/16-bit | 16-bit x 16-bit | Shift/ normalizing |
|---|---|---|---|---|
| First read | MD0<br>Quotient Low | MD0<br>Quotient Low | MD0<br>Product Low | MD0<br>LSB |
| | MD1<br>Quotient | MD1<br>Quotient High | MD1<br>Product | MD1 |
| | MD2<br>Quotient | | MD2<br>Product | MD2 |
| | MD3<br>Quotient High | | | |
| | MD4<br>Remainder Low | MD4<br>Remainder Low | | |
| Last read | MD5<br>Remainder High | MD5<br>Remainder High | MD3<br>Product High | MD3<br>MSB |

### 20.4.4 Shifting

In shift operation, 32-bit integer variable stored in MD0 to MD3 registers (the latter contains the most significant byte) is shifted left or right by a specified number of bits. The SLR bit (MD_CONT.5) defines the shift direction, and bits SC[4:0] (MD_CONT.4 –MD_CONT.0) specifies the shift count (which must not be 0). During shift operation, zeroes come into the left end of MD3 for shifting right or right end of the MD0 for shifting left.

### 20.4.5 Normalizing

All leading zeroes of 32-bit integer variable stored in MD0 to MD3 registers, the latter contains the most significant byte are removed by shift left operations. The whole operation is completed when the MSB (most significant bit) of MD3 register contains a ‘1‘. After normalizing, bits SC[4:0] (MD_CONT.4 –MD_CONT.0) contain the number of shift left operations, which were done.

# 21. Cyclic Redundant Check (CRC)

The CRC check function in CGF082A is based on CRC16-CCITT polynomial X16 + X12 + X5 + 1 (Figure 21.1). The general architecture of CRC computation is using LSFR and XOR by serial. The CRC function can support byte data and flash bank (128-byte per bank) CRC computation, the block diagram is shown as Figure 21.2 and the example of bank assign for bank CRC computation is shown as Figure 21.3. The data selection and the control are setting by the CRC XSFRs (Table 21.1).

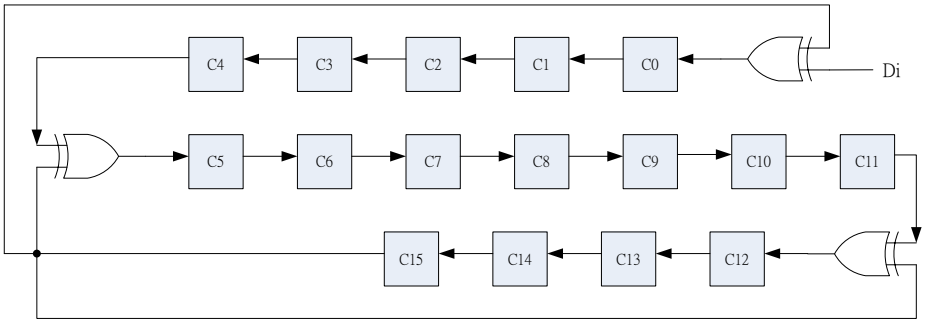


Figure 21.1 : The general LSFR architecture of CRC16-CCITT

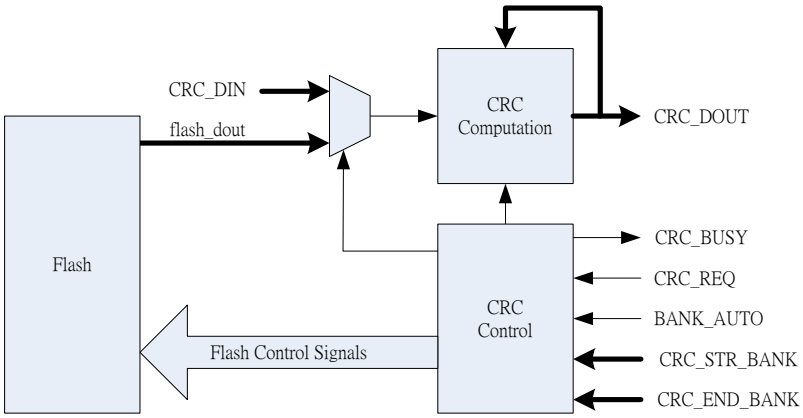


Figure 21.2 : The byte and flash bank CRC computation architecture

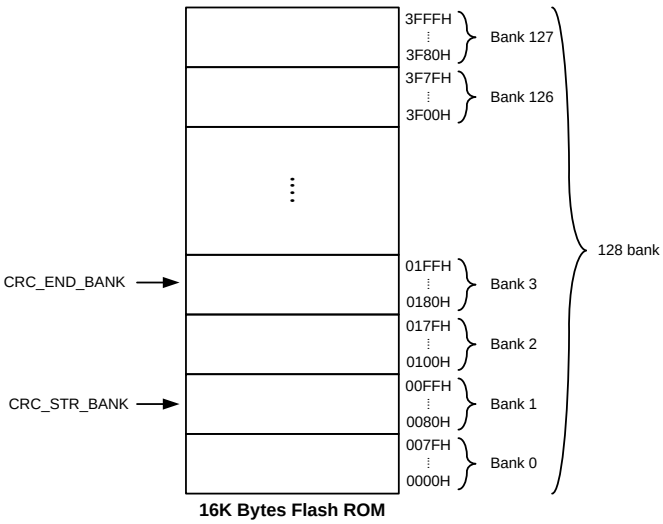


EX:
CRC_STR_BANK = 0x01
CRC_END_BANK = 0x03
The bank range for CRC computation : (0x01 ~ 0x03) bank

Figure 12.3 : The example of bank assign for bank CRC computation

| XSFR | Description | Address | Reset value |
|---|---|---|---|
| CRC_CTRL | CRC Control Register | 1018H | 00H |
| CRC_DIN | CRC Input Data Register | 1019H | 00H |
| CRC_DOUT_L | CRC Output Remainder Low Byte Data Register | 101AH | 00H |
| CRC_DOUT_H | CRC Output Remainder High Byte Data Register | 101BH | 00H |
| CRC_STR_BANK | Start Bank Index for Flash Bank CRC Computation | 101CH | 00H |
| CRC_END_BANK | End Bank Index for Flash Bank CRC Computation | 101DH | 00H |

Table 21.1 : CRC XSFR List

## 21.1 CRC_CTRL (CRC Control Register)

CRC_CTRL Address = 1018H Reset Value = 0x00H
CRC Control Register

| Bit | 7 | 6 | 5 | 4 | 3 | 2 | 1 | 0 |
|---|---|---|---|---|---|---|---|---|
| | CRC_REQ | CRC_BUSY | ----- | ----- | ----- | ----- | ----- | BANK_AUTO |
| Type | W | W | ----- | ----- | ----- | ----- | ----- | R/W |

| | |
|---|---|
| CRC_REQ<br>[7] | CRC Computation Request:<br>1 : Write “1” for CRC Computation Request |
| CRC_BUSY<br>[6] | CRC Computation Busy:<br>0 : CRC Computation Down<br>1 : CRC Computation Busy |
| BANK_AUTO<br>[0] | Enable Bank CRC Computation:<br>0 : Disable ( CRC_DIN 1-byte CRC Computation).<br>1 : Enable ( Bank multi-byte CRC Computation) |

## 21.2 CRC_DIN (CRC Data Register)

CRC_DIN Address = 1019H Reset Value = 0x00H
CRC Input Data Register

| Bit | CRC_DIN [7:0] | | | | | | | |
|---|---|---|---|---|---|---|---|---|
| | 7 | 6 | 5 | 4 | 3 | 2 | 1 | 0 |
| Type | R/W | R/W | R/W | R/W | R/W | R/W | R/W | R/W |

## 21.3 CRC_DOUT (CRC Output Remainder Data Register)

CRC_DOUT_L Address = 101AH Reset Value = 0x00H
CRC Output Remainder Data Register Low Byte

| Bit | CRC_DOUT [7:0] | | | | | | | |
|---|---|---|---|---|---|---|---|---|
| | 7 | 6 | 5 | 4 | 3 | 2 | 1 | 0 |
| Type | R | R | R | R | R | R | R | R |

CRC_DOUT_H Address = 101BH Reset Value = 0x00H
CRC Output Remainder Data Register High Byte

| Bit | CRC_DOUT [15:8] | | | | | | | |
|---|---|---|---|---|---|---|---|---|
| | 7 | 6 | 5 | 4 | 3 | 2 | 1 | 0 |
| Type | R | R | R | R | R | R | R | R |

## 21.4 CRC_STR_BANK (Start Bank Index Register for Bank CRC Computation)

CRC_STR_BANK Address = 101CH Reset Value = 0x00H

Start Bank Index for Flash Bank CRC Computation

| Bit | CRC_STR_BANK | | | | | | | |
|---|---|---|---|---|---|---|---|---|
| | 7 | 6 | 5 | 4 | 3 | 2 | 1 | 0 |
| Type | R/W | R/W | R/W | R/W | R/W | R/W | R/W | R/W |

| | |
|---|---|
| CRC_STR_BANK [7:0] | Start Bank Index for Flash Bank CRC Computation: 0~127 |

## 21.5 CRC_END_BANK (End Bank Index Register for Bank CRC Computation)

CRC_END_BANK Address = 101DH Reset Value = 0x00H

End Bank Index for Flash Bank CRC Computation

| Bit | CRC_END_BANK | | | | | | | |
|---|---|---|---|---|---|---|---|---|
| | 7 | 6 | 5 | 4 | 3 | 2 | 1 | 0 |
| Type | R/W | R/W | R/W | R/W | R/W | R/W | R/W | R/W |

| | |
|---|---|
| CRC_END _BANK [7:0] | End Bank Index for Flash Bank CRC Computation: 0~127 |

# 22. Independent General PWM

The CGF082A support one16-bit independent general PWM output for other duty control application (Figure 22.1). The IPWM control and setting XSFRs is shown as Table 22.1.

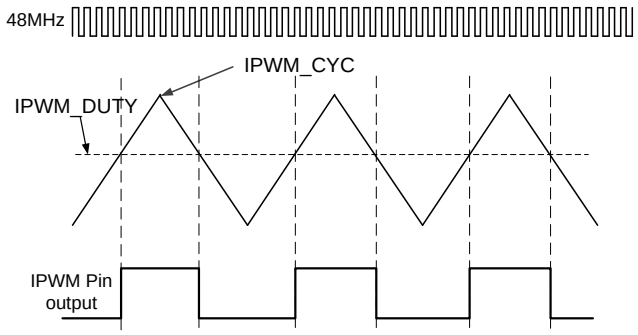


Figure 22.1 : Independent general PWM generator

| XSFR | Description | Address | Reset value |
|---|---|---|---|
| IPWM_CYC_L | Independent General PWM Cycle Low Byte | 1020H | 02H |
| IPWM_CYC _H | Independent General PWM Cycle High Byte | 1021H | 00H |
| IPWM_DUTY_L | Independent General PWM Duty Low Byte | 1022H | FFH |
| IPWM_DUTY_H | Independent General PWM Duty High Byte | 1023H | FFH |
| IPWM_CTRL | Independent General PWM Control Register | 1024H | 00H |

Table 22.1 : IPWM XSFR List

## 21.1 IPWM_CTRL (Independent General PWM Register)

IPWM_CTRL Address = 1024H Reset Value = 0x00H

Independent General PWM Control Register

| | | | | | | | | |
|---|---|---|---|---|---|---|---|---|
| | ---- | ---- | ---- | ---- | ---- | IPWM_MODE | | IPWM_EN |
| Bit | 7 | 6 | 5 | 4 | 3 | 2 | 1 | 0 |
| Type | ---- | ---- | ---- | ---- | ---- | R/W | | R/W |

| | |
|---|---|
| IPWM_MODE<br>[2:1] | Independent General PWM mode select:<br>00 : Force Low<br>01 : Force High<br>10 : Active High<br>11 : Active Low |
| IPWM_EN<br>[0] | Independent General PWM enable:<br>0 : Disable<br>1 : Enable. |

## 21.2 IPWM_CYC (Independent General PWM Cycle Register)

IPWM_CYC_L Address = 1020H Reset Value = 0x02H

Independent General PWM Cycle Register Low Byte

| | | | | | | | | |
|---|---|---|---|---|---|---|---|---|
| | IPWM_ MAX[7:0] | | | | | | | |
| Bit | 7 | 6 | 5 | 4 | 3 | 2 | 1 | 0 |
| Type | R/W | R/W | R/W | R/W | R/W | R/W | R/W | R/W |

| IPWM_CYC_H | Address = 1021H | Reset Value = 0x00H |
|---|---|---|

Independent General PWM Cycle Register High Byte

| Bit | IPWM_CYC[15:8] | | | | | | | |
|---|---|---|---|---|---|---|---|---|
| | 7 | 6 | 5 | 4 | 3 | 2 | 1 | 0 |
| Type | R/W | R/W | R/W | R/W | R/W | R/W | R/W | R/W |

## 21.3 IPWM_DUTY (Independent General PWM Duty Register)

| IPWM_DUTY_L | Address = 1022H | Reset Value = 0xFFH |
|---|---|---|

Independent General PWM Duty Low Byte

| Bit | IPWM_DUTY[7:0] | | | | | | | |
|---|---|---|---|---|---|---|---|---|
| | 7 | 6 | 5 | 4 | 3 | 2 | 1 | 0 |
| Type | R/W | R/W | R/W | R/W | R/W | R/W | R/W | R/W |

| IPWM_DUTY_H | Address = 1023H | Reset Value = 0xFFH |
|---|---|---|

Independent General PWM Duty High Byte

| Bit | IPWM_DUTY[15:8] | | | | | | | |
|---|---|---|---|---|---|---|---|---|
| | 7 | 6 | 5 | 4 | 3 | 2 | 1 | 0 |
| Type | R/W | R/W | R/W | R/W | R/W | R/W | R/W | R/W |

# 23. One Wire RF/IR Signal Decode

The one wire RF/IR signal decode function can decode one wire data automatically by hardware that after setting the data format and type by IR decode XSFR. The maximum decode data is 48 bits. It can decode the output data of RF receiver module or control board. The block diagram is shown as Figure 23.1. The one wire RF/IR signal decode function related XSFRs are shown in Table 23.1.

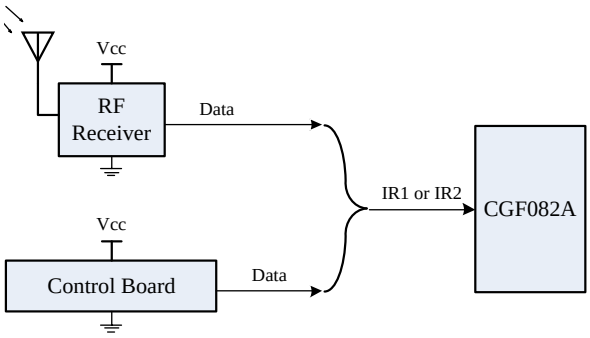


Figure 23.1 : One wire signal decode by CGF082A

| XSFR | Description | Address | Reset value |
|---|---|---|---|
| IR_DEC_SET | IR Data Decode Setting Register | 1038H | 00H |
| IR_DEC_CTRL | IR Data Decode Control Register | 1039H | 00H |
| IR_HEADER_Z1_L | IR Data HEADER Zone1 Cycle Register Low Byte | 103AH | 80H |
| IR_HEADER_Z1_H | IR Data HEADER Zone1 Cycle Register High Byte | 103BH | BBH |
| IR_HEADER_Z2_L | IR Data HEADER Zone2 Cycle Register Low Byte | 103CH | 00H |
| IR_HEADER_Z2_H | IR Data HEADER Zone2 Cycle Register High Byte | 103DH | 7DH |
| IR_STOP_Z_L | IR Data STOP Zone Cycle Register Low Byte | 103EH | 80H |
| IR_STOP_Z_H | IR Data STOP Zone Cycle Register High Byte | 103FH | BBH |
| IR_DOUT0 | IR Decode Output Data Byte0 | 1040H | 00H |
| IR_DOUT1 | IR Decode Output Data Byte1 | 1041H | 00H |
| IR_DOUT2 | IR Decode Output Data Byte2 | 1042H | 00H |
| IR_DOUT3 | IR Decode Output Data Byte3 | 1043H | 00H |
| IR_DOUT4 | IR Decode Output Data Byte4 | 1044H | 00H |
| IR_DOUT5 | IR Decode Output Data Byte5 | 1045H | 00H |

Table 23.1 : One wire RF/IR signal decode XSFR List

## 23.1 IR_DEC_SET (IR Data Decoder Setting Register)

Since one wire RF/IR signal has various types, we provide the IR_DEC_SET setting register for users to set the one wire RF/IR data type they want to receive (Table 23.1.1). Including whether the received data has a header (IR_DEC_SET[7], Figure 23.1.1), the decoding pattern of the received data bits (IR_DEC_SET[5], Figure 23.1.2), and the first bit received is the MSB or LSB (IR_DEC_SET[6], Figure 23.1.3), etc. can be set in the IR_DEC_SET register.

If the received signal includes HEADER, you must also set the HEADER high-level time length (Table 23.3.1) and low-level time length (Table 23.4.1); for STOP, you only need to set a time length (Table 23.4.1). In addition, the clock frequency for counting the signal can be selected according to the HEADER or STOP length of the input signal (set by DEC_CLK_SEL in Table 23.1.1), which can avoid overflow in the internal counter and cause distortion of the one wire signal.

IR_DEC_SET Address = 1038H Reset Value = 0x00H

IR Data Decoder Setting Register

| | HEADER_EN | DOUT_REV | DIN_TYP | DIN_DB | | DEC_CLK_SEL | | |
|---|---|---|---|---|---|---|---|---|
| Bit | 7 | 6 | 5 | 4 | 3 | 2 | 1 | 0 |
| Type | R/W | R/W | R/W | R/W | | R/W | | |

| | |
|---|---|
| HEADER_EN<br>[7] | Input Data with HEADER:<br>0 : No HEADER<br>1 : With HEADER |
| DOUT_REV<br>[6] | IR Decode Output Data Reverse:<br>0 : First input data is LSB<br>1 : First input data is MSB |
| DIN_TYP<br>[5] | Input Data Type :<br>0 : Data Type1:<br>Falling to Rising edge: Duty > 50% → Din = 0; Duty < 50% → Din = 1<br>1 : Data Type2:<br>Falling to Rising edge: Duty > 50% → Din = 1; Duty < 50% → Din = 0 |
| DIN_DB_SEL<br>[4:3] | Input Data De-bounce Time Select :<br>00 : 0 ns<br>01 : 250 ns<br>10 : 500 ns<br>11 : 1000 ns |
| DEC_CLK_SEL<br>[2:0] | Data Decode Clock Frequency Select :<br>000 : 24 MHz<br>001 : 16 MHz<br>010 : 8 MHz<br>011 : 6 MHz<br>100 : 3 MHz<br>101: 2 MHz |

Table 23.1.1 : IR Data Decoder Setting Register

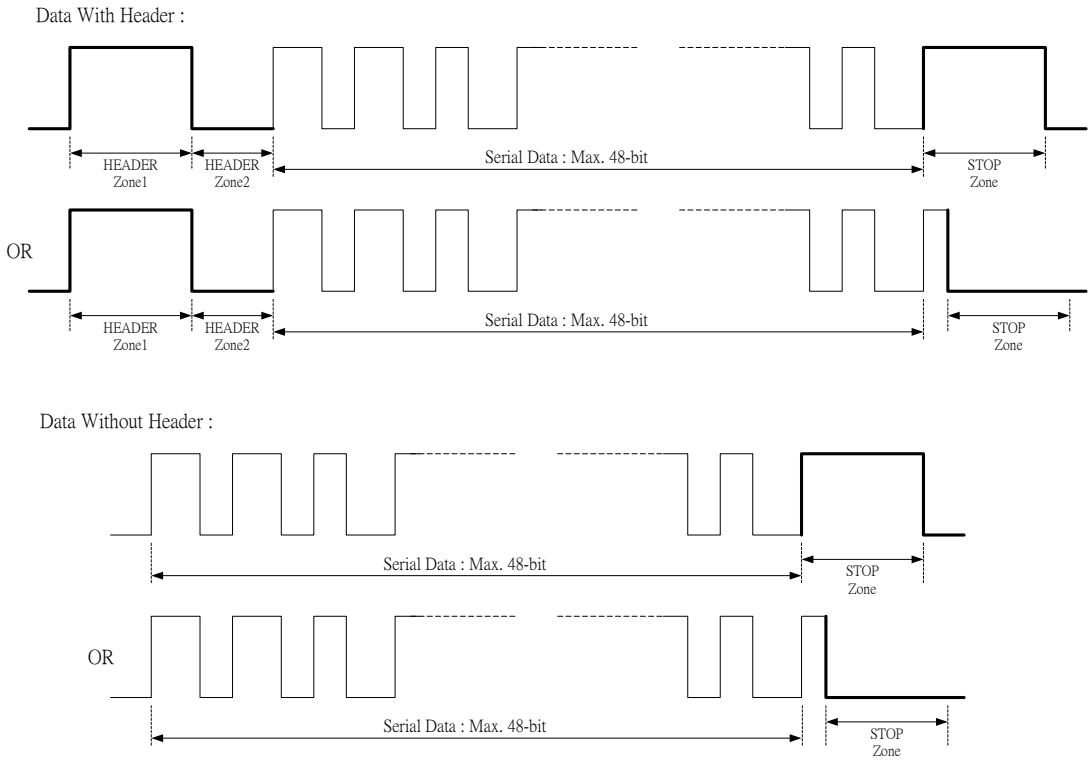

Figure 23.1.1 : The header and stop signal express

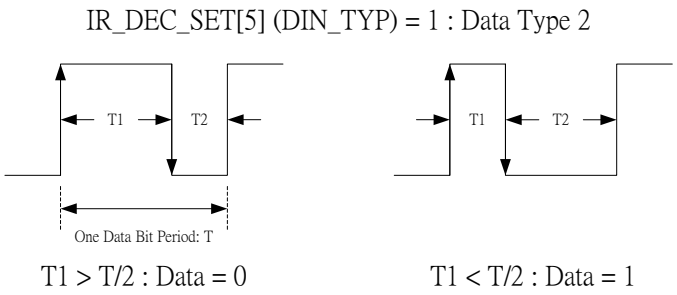


Figure 23.1.2 : The input data type select

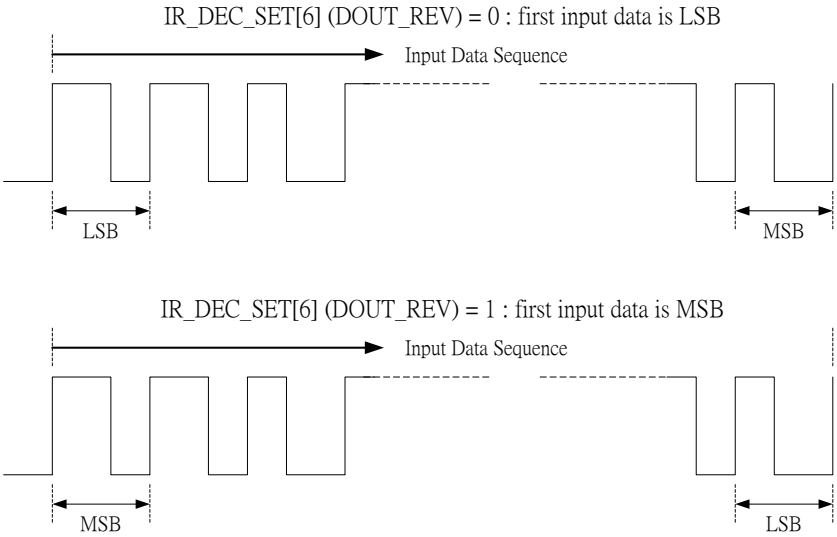


Figure 23.1.3 : The output data reverse select

## 23.2 IR_DEC_CTRL (IR Data Decoder Control Register)

One wire signal input can be selected from IR1 or IR2, and the setting method is as shown in bit[6] of IR_DEC_CTRL register (IRIN_SEL) in the Table 23.2.1. When IR_DEC_EN (Table 23.2.1 bit[7]) is set to "1", decoding of the input signal will begin. When the one wire signal decoding is completed, the IRDEC_OK flag will be set to "1", and the decoded data will be placed in the IR Decode output register (Table 23.6 .1). The user must write "1" to IRDEC_OK_CLR (Table 23.2.1 bit[0]) to clear the IRDEC_OK flag to "0".

IRDEC_CTRL Address = 1039H Reset Value = 0x00H
IR Data Decoder Control Register

| | | | | | | | | |
|---|---|---|---|---|---|---|---|---|
| | IR_DEC_EN | IRIN_SEL | --- | IRDEC_OK | --- | --- | --- | IRDEC_OK_CLR |
| Bit | 7 | 6 | 5 | 4 | 3 | 2 | 1 | 0 |
| Type | R/W | R/W | --- | R/W | --- | --- | --- | W |

| | |
|---|---|
| IRDEC_EN<br>[7] | IR Decode Enable:<br>1 : Enable IR Decode. |
| IRIN_SEL<br>[6] | IR Decode Data Input Select:<br>0 : IR decode data input from IR1 (PIN CH3)<br>1 : IR decode data input from IR2 (PIN CH7) |
| IRDEC_OK<br>[4] | IR Data Decode OK Flag:<br>1 : IR Input Decode Finish. Clear by write “1” at IRDEC_OK_CLR bit. |
| IRDEC_OK_CLR<br>[0] | Clear IR Data Decode OK Flag:<br>1 : Write “1” to Clear IRDEC_OK Flag . |

Table 23.2.1 : IR Data Decoder Control Register

## 23.3 IR_HEADER_Z1 (IR Data Header Zone1 Cycle Register)

IR_HEADER_Z1_L Address = 103AH Reset Value = 0x80H
IR Data HEADER Zone1 Cycle Register Low Byte

| | | | | | | | | |
|---|---|---|---|---|---|---|---|---|
| Bit | IR_HEADER_Z1[7:0] | | | | | | | |
| | 7 | 6 | 5 | 4 | 3 | 2 | 1 | 0 |
| Type | R/W | R/W | R/W | R/W | R/W | R/W | R/W | R/W |

IR_HEADER_Z1_H Address = 103BH Reset Value = 0xBBH
IR Data HEADER Zone1 Cycle Register High Byte

| | | | | | | | | |
|---|---|---|---|---|---|---|---|---|
| Bit | IR_HEADER_Z1[15:8] | | | | | | | |
| | 7 | 6 | 5 | 4 | 3 | 2 | 1 | 0 |
| Type | R/W | R/W | R/W | R/W | R/W | R/W | R/W | R/W |

Table 23.3.1 : IR Data Header Zone1 Cycle Register

## 23.4 IR_HEADER_Z2 (IR Data Header Zone2 Cycle Register)

IR_HEADER_Z2_L — Address = 103CH — Reset Value = 0x00H

IR Data HEADER Zone2 Cycle Register Low Byte

| Bit | IR_HEADER_Z2[7:0] | | | | | | | |
|---|---|---|---|---|---|---|---|---|
| | 7 | 6 | 5 | 4 | 3 | 2 | 1 | 0 |
| Type | R/W | R/W | R/W | R/W | R/W | R/W | R/W | R/W |

IR_HEADER_Z2_H — Address = 103DH — Reset Value = 0x7DH

IR Data HEADER Zone2 Cycle Register High Byte

| Bit | IR_HEADER_Z2[15:8] | | | | | | | |
|---|---|---|---|---|---|---|---|---|
| | 7 | 6 | 5 | 4 | 3 | 2 | 1 | 0 |
| Type | R/W | R/W | R/W | R/W | R/W | R/W | R/W | R/W |

Table 23.4.1 : IR Data Header Zone2 Cycle Register

## 23.5 IR_STOP_Z (IR Data STOP Zone Cycle Register)

IR_STOP_Z_L — Address = 103EH — Reset Value = 0x80H

IR Data STOP Zone Cycle Register Low Byte

| Bit | IR_STOP_Z[7:0] | | | | | | | |
|---|---|---|---|---|---|---|---|---|
| | 7 | 6 | 5 | 4 | 3 | 2 | 1 | 0 |
| Type | R/W | R/W | R/W | R/W | R/W | R/W | R/W | R/W |

IR_STOP_Z_H — Address = 103FH — Reset Value = 0xBBH

IR Data STOP Zone Cycle Register High Byte

| Bit | IR_STOP_Z[15:8] | | | | | | | |
|---|---|---|---|---|---|---|---|---|
| | 7 | 6 | 5 | 4 | 3 | 2 | 1 | 0 |
| Type | R/W | R/W | R/W | R/W | R/W | R/W | R/W | R/W |

Table 23.5.1 : IR Data STOP Zone Cycle Register

## 23.6 IR_DOUT0~IR_DOUT5 (IR Decode Output Register Byte0 ~ Byte5)

IR_DOUT0 Address = 1040H Reset Value = 0x00H
IR Decode Output Data Byte0

| Bit | IR_DOUT [7:0] | | | | | | | |
|---|---|---|---|---|---|---|---|---|
| | 7 | 6 | 5 | 4 | 3 | 2 | 1 | 0 |
| Type | R | R | R | R | R | R | R | R |

IR_DOUT1 Address = 1041H Reset Value = 0x00H
IR Decode Output Data Byte1

| Bit | IR_DOUT [15:8] | | | | | | | |
|---|---|---|---|---|---|---|---|---|
| | 7 | 6 | 5 | 4 | 3 | 2 | 1 | 0 |
| Type | R | R | R | R | R | R | R | R |

IR_DOUT2 Address = 1042H Reset Value = 0x00H
IR Decode Output Data Byte2

| Bit | IR_DOUT [23:16] | | | | | | | |
|---|---|---|---|---|---|---|---|---|
| | 7 | 6 | 5 | 4 | 3 | 2 | 1 | 0 |
| Type | R | R | R | R | R | R | R | R |

IR_DOUT3 Address = 1043H Reset Value = 0x00H
IR Decode Output Data Byte3

| Bit | IR_DOUT [31:24] | | | | | | | |
|---|---|---|---|---|---|---|---|---|
| | 7 | 6 | 5 | 4 | 3 | 2 | 1 | 0 |
| Type | R | R | R | R | R | R | R | R |

IR_DOUT4 Address = 1044H Reset Value = 0x00H
IR Decode Output Data Byte4

| Bit | IR_DOUT [23:16] | | | | | | | |
|---|---|---|---|---|---|---|---|---|
| | 7 | 6 | 5 | 4 | 3 | 2 | 1 | 0 |
| Type | R | R | R | R | R | R | R | R |

IR_DOUT5 Address = 1045H Reset Value = 0x00H
IR Decode Output Data Byte5

| Bit | IR_DOUT [31:24] | | | | | | | |
|---|---|---|---|---|---|---|---|---|
| | 7 | 6 | 5 | 4 | 3 | 2 | 1 | 0 |
| Type | R | R | R | R | R | R | R | R |

Table 23.6.1 : IR Decode Output Data Register Byte0~Byte5

# 24. Software Reset

The CGF082A support software reset function for reset system by user. It is must release the software reset key before software reset enable. The software reset XSFRs is shown as Table 24.1.

| XSFR | Description | Address | Reset value |
|---|---|---|---|
| SOFT_RST_KEY | Software Reset Key Register | 1028H | 00H |
| SOFT_RST_EN | Software Reset Enable Register | 1029H | 00H |

Table 24.1 : IPWM XSFR List

## 24.1 SOFT_RST_KEY (Software Reset Key Register)

SOFT_RST_KEY Address = 1028H Reset Value = 0x00H

Software Reset Key Register

| Bit | SOFT_RST_KEY [7:0] | | | | | | | |
|---|---|---|---|---|---|---|---|---|
| | 7 | 6 | 5 | 4 | 3 | 2 | 1 | 0 |
| Type | R/W | R/W | R/W | R/W | R/W | R/W | R/W | R/W |

Software reset key, must write three specific values AAH, 55H and A5H to the SOFT_RST_KEY for enable the SOFT_RST_EN write available.

The sequence is :

**MOV SOFT_RST_KEY, #AAh**

**MOV SOFT_RST_KEY, #55h**

**MOV SOFT_RST_KEY, #A5h**

## 24.2 SOFT_RST_EN (Software Reset Enable Register)

SOFT_RST_EN Address = 1029H Reset Value = 0x00H

Software Reset Enable Register

| Bit | SRST_EN | ----- | ----- | ----- | ----- | ----- | ----- | ----- |
|---|---|---|---|---|---|---|---|---|
| | 7 | 6 | 5 | 4 | 3 | 2 | 1 | 0 |
| Type | W | X | X | X | X | X | X | X |

SRST_EN Software reset enable :

0 : Disable Software Reset.

1 : Enable Software Reset.

# 25. Motor Driving Engine (MDE)

## 25.1 MDE Architecture

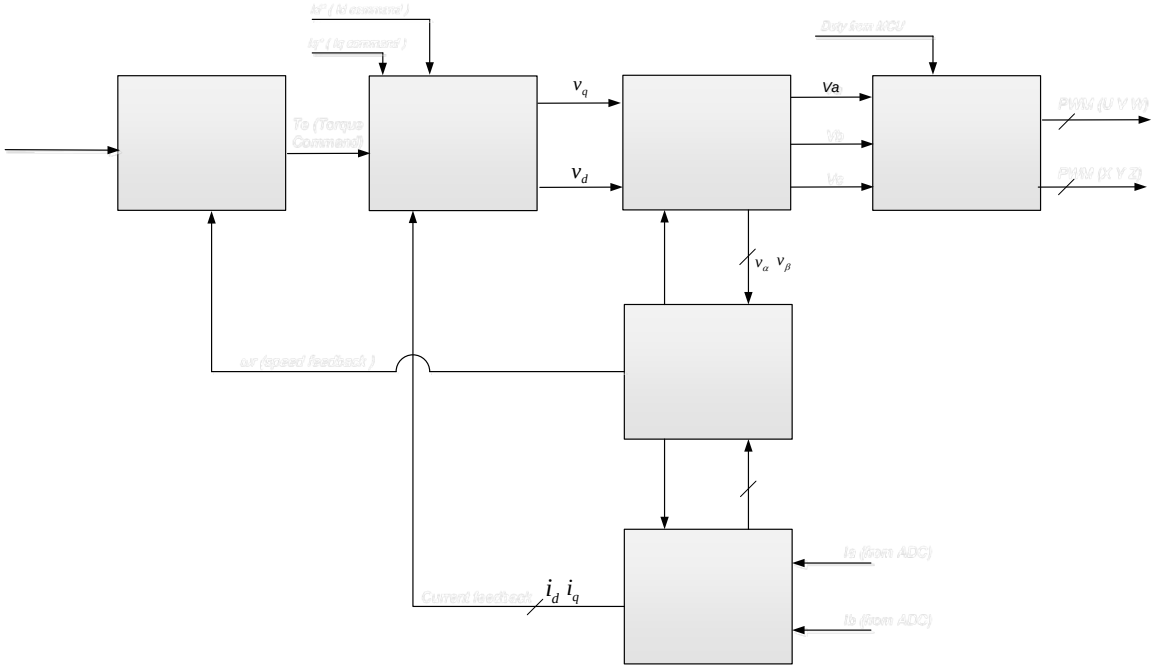


Figure 25.1 : MDE Architecture

CGF0X2AXX support PMSM Field Oriented Control, The description of FOC control architecture is shown in Figure 25.1, which includes 6 control blocks including Speed Control Loop, Current Control Loop, SMO Rotor Position Estimation, SVPWM Engine, Coordinate Transformation and Inverse Coordinate Transformation.

First, the ia and ib phase current signals of the 3 phase DC motor are converted into iα and iβ signals in the form of stationary referenece frame through the Coordinate Transformation blcok. At the same time, the control voltages Vd and Vq are also converted into the stationary referenece frame form through the Inverse Coordinate Transformation Block. The Vα, Vβ signals, these stationary referenece frame signals iα, iβ, Vα and Vβ are used in the SMO Rotor Position Estimation Block to estimate the motor rotor position signal θr and rotational speed signal ωr.

In the Speed Control Loop Block, the speed command *ωs* and the estimated speed signal *ωr* are used to calculate the toque control quantity *Te* through the speed control law. *Te* is also the current command of the Current Control Loop Block, using the estimated motor rotor position signal θr, In Coordinate Transformation Block, the stationary reference frame current signal is converted into a synchronized reference frame current signal, Id and Iq, as the feedback signal of the Current Control Loop Block, the command and feedback current calculate the voltage control quantities Vd and Vq through the current control law, The voltage control quantities Vd and Vq are then converted into the three-phase motor control phase voltages Va, Vb and Vc through the Inverse Coordinate Transformation Block.

The SVPWM Engine generates the pluse width modulation signals $PWM_{UVW}$ and $PWM_{XYZ}$ of the frequency conversion circuit. The detailed control function description of each Block will be detailed in the following chapters.

## 25.2 Coordinate Transformation Block

### 25.2.1 Coordinate Transformation Block Architecture

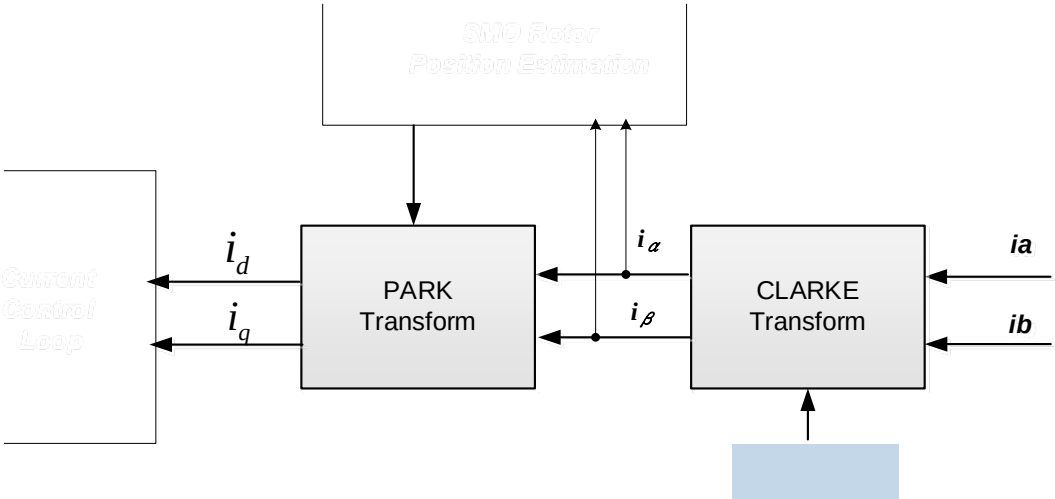


Figure 25.2.1 : Coordinate Transformation Block Architecture

### 25.2.2 CLAEKE Transform

The first coordinate transform, called the CLAEKE Transform, moves a three-axis, two-dimensional coordinate system, referenced to the stator, onto a two-axis system, keeping the same reference (see Figure25.2.2, where ia, ib and ic are the individual phase currents).

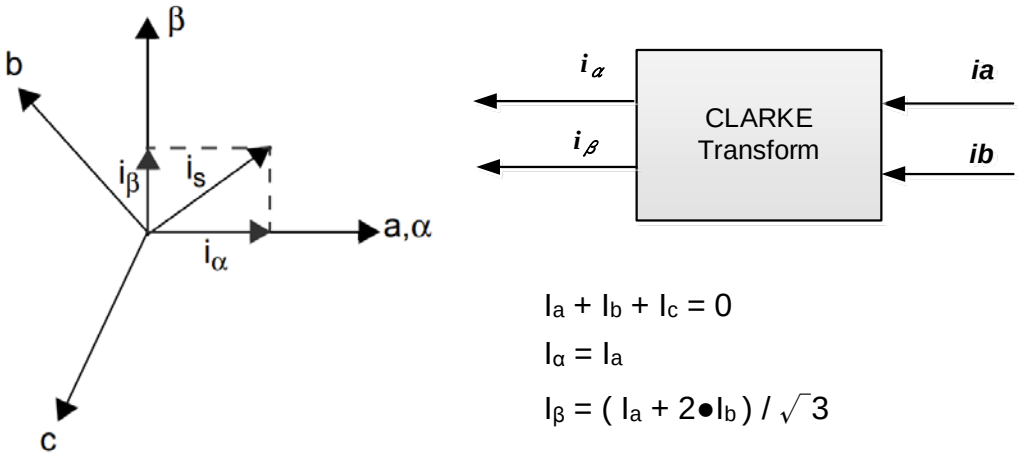


$I_a + I_b + I_c = 0$

$I_\alpha = I_a$

$I_\beta = ( I_a + 2 \bullet I_b ) / \sqrt{3}$

Figure 25.2.2 : Cleake Transform

### 25.2.3 PARK Transform

At this point, you have the stator current represented on a two-axis orthogonal system with the axis called α-β. The next step is to transform into another two-axis system that is rotating with the rotor flux. This transformation uses the PARK Transform, as illustrated in Figure25.2.3. This two-axis rotating coordinate system is called the d-q axis. θ represents the rotor angle.

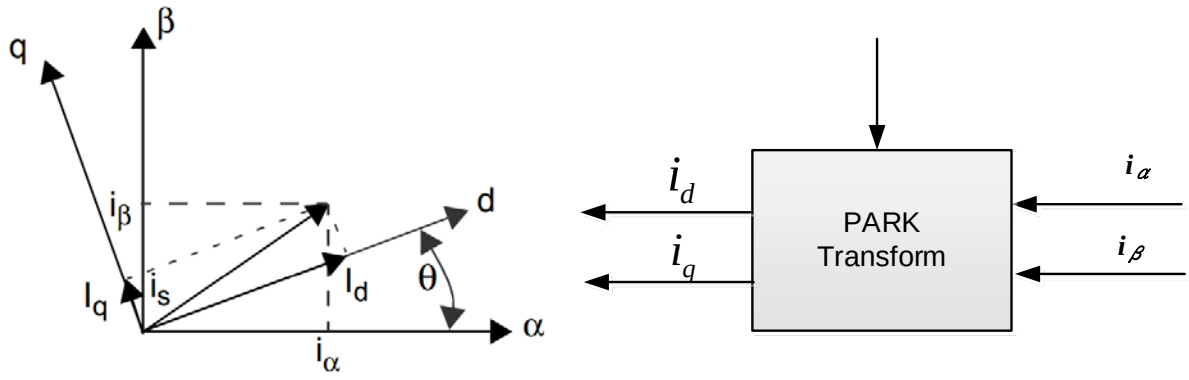


$$Id = I\alpha \bullet \cos\theta_r + I\beta \bullet \sin\theta_r$$
$$Iq = -I\alpha \bullet \sin\theta_r + I\beta \bullet \cos\theta_r$$

Figure 25.2.3 : Park Transform

### 25.2.4 Coordinate Transformation Block description and setting

ESTCR control register is in the FOCCONT[6:4] (Address : D6H) , ESTCR can set the scaling ratio of iα and iβ when entering SMO Rotor Position Estimation Block. Please refer to the ESTCR description in the table below.

| FOCCONT Field Oriented Control Register | | Address = D6H | | | | Reset Value = 0x00H | | |
|---|---|---|---|---|---|---|---|---|
| Bit | PI CLEAR | ESTCR | | | INV ADCD | ADC TRIG | PLL EN | SPEED EN |
| | | 6 | 5 | 4 | | | | |
| Type | | R/W | R/W | R/W | | | | |

| ESTCR [6:4] | Iα and Iβ current ratio ( to SMO Rotor Position Estimation block ) | |
|---|---|---|
| | 000 : Current ValueX1 | 100 : Current Value/2 |
| | 001 : Current ValueX2 | 101 : Current Value/4 |
| | 010 : Current ValueX4 | 110 : Current Value/8 |
| | 011 : Current ValueX8 | 111 : Current Value/16 |

Table25.2.1 : IESTCR SFR

In the Coordinate Transformation Block, the ia, ib, iα and iβ current value can be observed through XSFR IA, IB, IALPHA, and IBETA; iq and id current value can be observed through the page0 and page1 of PI_FB SFR.

For the related reading process in page of SFR, first set the SFR_PAGE (SFR Address = ECH) where the signal is located, and then read the corresponding SFR position data to read the signal value.

The reading process is as follows:

(1) Read Ia signal vale : Read XSFR IA content directly (address = 1060H / 1061H)

(2) Read Ib signal vale : Read XSFR IB content directly (address = 1058H / 1059H)

(3) Read iα signal vale : Read XSFR IALPHA content directly (address = 1062H / 1063H)

(4) Read Iβ signal vale : Read XSFR IBETA content directly (address = 105AH / 105BH)

(5) Read iq signal vale :
Step1 : Setting SFR_PAGE = 0(Address=ECH)
Step2 : Read the IQ_FB SFR value of PI_FB (address = AEH / AFH)

(6) Read Id signal vale :
Step1 : Setting SFR_PAGE = 1(Address=ECH)
Step2 : Read the ID_FB SFR value of PI_FB (address = AEH / AFH)

Please refer to the XSFR and SFR description in the Table25.2.2 and Table25.2.3.

| XSFR | Description | Address | Characteristic |
|---|---|---|---|
| IA_L | ADC Output of phase A current ( Ia ) Low Byte | 1060H | Read Only |
| IA_H | ADC Output of phase A current ( Ia ) High Byte | 1061H | Read Only |
| IALPHA_L | α-axis current (iα) Low Byte of CLARKE Transform | 1062H | Read Only |
| IALPHA_H | α-axis current (iα) High Byte of CLARKE Transform | 1063H | Read Only |
| IB_L | ADC Output of phase B current ( Ib ) Low Byte | 1058H | Read Only |
| IB_H | ADC Output of phase B current ( Ib ) High Byte | 1059H | Read Only |
| IBETA_L | β-axis current (iβ) Low Byte of CLARKE Transform | 105AH | Read Only |
| IBETA_H | β-axis current (iβ) High Byte of CLARKE Transform | 105BH | Read Only |

Table25.2.2 : Coordinate Transformation Block Signals observe

| SFR | Description | | Address |
|---|---|---|---|
| PI_FB_L | PI Control Feedback Data Register Low byte | | AEH |
| PI_FB_H | PI Control Feedback Data Register High byte | | AFH |
| | Parameters | Description | |
| SFR_PAGE = 0 | IQ_FB | q-axis current (Iq) of PARK Transform | Read-Only |
| SFR_PAGE = 1 | ID_FB | d-axis current (Id) of PARK Transform | Read-Only |

Table25.2.3 : Id and Iq Signals observe

## 25.3 Current Control Loop Block

### 25.3.1 Current Control Loop Block Architecture

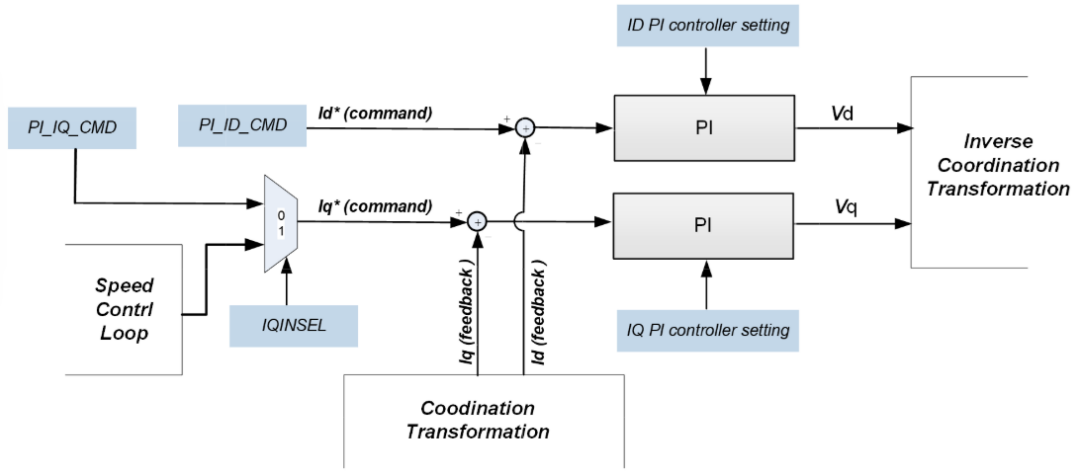


Figure 25.3.1 : Current Control Loop Block Architecture

### 25.3.2 Current Control Loop Block description and setting

Current Control Loop Block consists of a Multiplexer and two PI controllers. The Multiplexer can set the Iq command (Iq*) source from SFR or Speed Control Loop Block which input, The two PI controllers are d-axis current loop PI controller and q-axis current loop PI controller, whose function is to set and adjust Id and Iq current response. PI controller related functions and architecture will be explained in detail in Chapter 25.8 PI controller.

Id command (Id*) is set by ID_PI_CMD SFR. For the related reading process, first set the SFR_PAGE = 1 (SFR Address = ECH) where the signal is located, and then set the PI_CMD (SFR Address = A6/A7 H) position. access and set the Id command (Id*).

Iq command (Iq*) can be selected by IQINSEL SFR register (see Table25.3.1) for Toque or Speed control. When IQINSEL = 0, it is Motor toque control, which is set by IQ_PI_CMD SFR. For the related reading process, first set the SFR_PAGE = 0 (SFR Address = ECH) where the signal is located, and then set the PI_CMD (see Table25.3.2) location to access and set the Iq command of Toque control of Iq command (Iq*). When IQINSEL = 1 is Motor Speed control, Iq command (Iq*) is connected from Speed Control Loop Block output to iq PI control current loop input to perform speed control.

Please refer to the SFR description in the table below.

| MOTOR_CONT1 Motor Control Register 1 | | | Address = BFH | | | Reset Value = 0x00H | | |
|---|---|---|---|---|---|---|---|---|
| Bit | SD MODE | MPWM DUSEL | MPWM EN | IQINSE 4 | FOC ANGSEL | USER_PI _ACT | GEN_LPF_ ACT | SPFB FILTER |
| Type | | | | R/W | | | | |

| | |
|---|---|
| IQINSEL | IQ current loop PI Control input select |
| [4] | 0 : From IQ_PI_CMD SFR ( SFR_PAGE = 0 & SFR Address = A6/A7 H ) |
| | 1 : From Speed control loop output ( speed PI- control output ) |

Table25.3.1 : IQINSEL SFR

| SFR | Description | | Address |
|---|---|---|---|
| PI_CMD_L | PI-Control Command Data Low byte | | A6H |
| PI_CMD_H | PI-Control Command Data High byte | | A7H |
| | Parameters | Description | Reset Value |
| SFR_PAGE = 0 | IQ_PI_CMD | Command value of IQ PI Control | 0x0000H |
| SFR_PAGE = 1 | ID_PI_CMD | Command value of ID PI Control | 0x0000H |

Table25.3.2 : Current Loop IQ / ID PI control Command

## 25.4 Inverse Coordinate Transformation Block

### 25.4.1 Inverse Coordinate Transformation Block Architecture

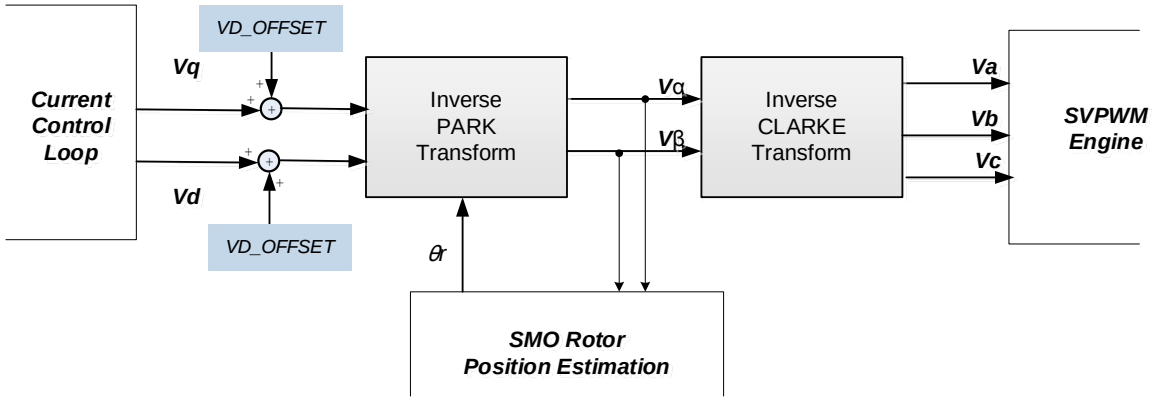


Figure 17.4.1 : Inverse Coordinate Transformation Block Architecture

### 25.4.2 Inverse PARK Transform

After the PI iteration, you have two voltage component vectors in the rotating d-q axis. You will need to go through complementary inverse transforms to get back to the 3-phase motor voltage. First, you transform from the two-axis rotating d-q frame to the two-axis stationary frame α-β. This transformation uses the Inverse Park Transform, as illustrated in Figure 25.4.2.

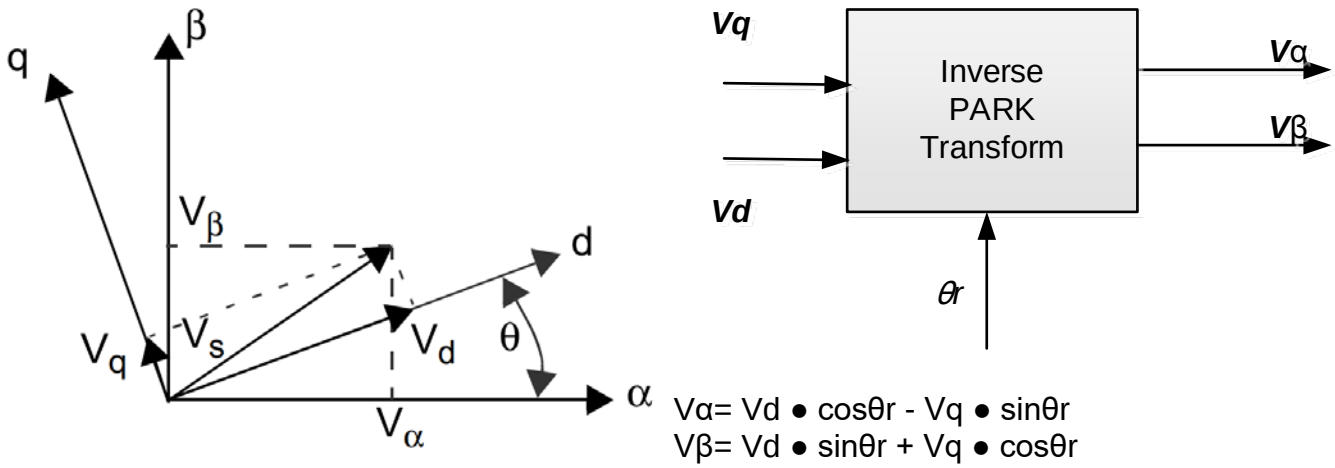


Figure 25.4.2 : Inverse Park Transform

### 25.4.3 Inverse CLARKE Transform

The next step is to transform from the stationary two-axis α-β frame to the stationary three-axis, 3-phase reference frame of the stator. Mathematically, this transformation is accomplished with the Inverse CLARKE Transform, as illustrated in Figure 25.4.3.

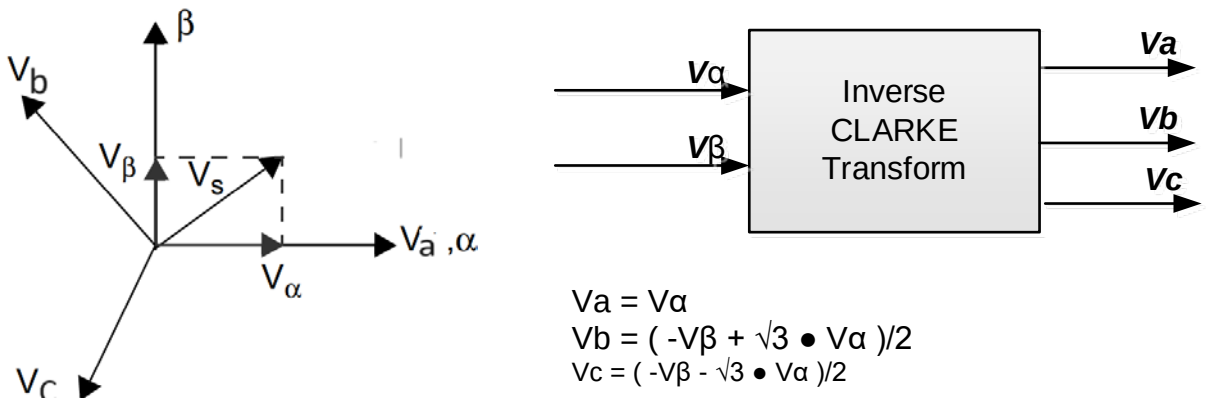


Figure 25.4.3 : Inverse Cleake Transform

25.4.4 Inverse Coordinate Transformation Block description and setting

In Inverse Coordinate Transformation Block, the Va, Vb Vα, Vβ value can be observed through XSFR VA, VB, VALPHA, and VBETA; Vq and Vd voltage value can be observed through the page0 and page1 of PI_OUT SFR.

For the related reading process in page of SFR, first set the SFR_PAGE (SFR Address = ECH) where the signal is located, and then read the corresponding SFR position data to read the signal value.

The reading process is as follows:

(1) Read Vq signal value :
Step1 : Setting SFR_PAGE = 0(Address=ECH)
Step2 : Read the IQ_PI_OUT SFR value of PI_OUT (address = ACH / ADH)

(2) Read Vd signal value :
Step1 : Setting SFR_PAGE = 1(Address=ECH)
Step2 : Read the ID_PI_OUT SFR value of PI_OUT (address = ACH / ADH)

(3) Read Vα signal value : Read XSFR VALPHA content directly (address = 1064H / 1065H)

(4) Read Vβ signal value : Read XSFR VBETA content directly (address = 105CH / 105DH)

(5) Read Va signal value : Read XSFR VA content directly (address = 1066H / 1067H)

(6) Read Vb signal value : Read XSFR VB content directly (address = 105EH / 105FH)

Please refer to the XSFR and SFR description in the Table25.4.1 and Table25.4.2.

| XSFR | Description | Address | Characteristic |
|---|---|---|---|
| VALPHA_L(Read) | α-axis Stator Voltage Data Register Low Byte | 1064H | Read Only |
| VALPHA_H(Read) | α-axis Stator Voltage Data Register High Byte | 1065H | Read Only |
| VA_L(Read) | Phase A Drive Voltage Data Register Low Byte | 1066H | Read Only |
| VA_H(Read) | Phase A Drive Voltage Data Register High Byte | 1067H | Read Only |
| VBETA_L(Read) | β-axis Stator Voltage Data Register Low Byte | 105CH | Read Only |
| VBETA_H(Read) | β-axis Stator Voltage Data Register High Byte | 105DH | Read Only |
| VB_L(Read) | Phase B Drive Voltage Data Register Low Byte | 105EH | Read Only |
| VB_H(Read) | Phase B Drive Voltage Data Register High Byte | 105FH | Read Only |

Table25.4.1 : Inverse Coordinate Transformation Block Signals observe

| SFR | Description | | Address |
|---|---|---|---|
| PI_OUT_L | PI Control Output Data Register Low byte | | ACH |
| PI_OUT_H | PI Control Output Data Register High byte | | ADH |
| | Parameters | Description | |
| SFR_PAGE = 0 | IQ_PI_OUT | PI Control output voltage of IQ current Loop (Vq) | Read-Only |
| SFR_PAGE = 1 | ID_PI_OUT | PI Control output voltage of ID current Loop (Vd) | Read-Only |

Table25.4.2 : Vd and Vq Signals observe

In the Current Loop Block output signal Vd and Vq, the compensation amount (VD_OFFSET and VQ_OFFSET) can be added respectively according to the system requirements. For the related reading process, first set the SFR_PAGE (SFR Address = ECH) where the signal is located, and then set the FOC_D (SFR Address = D4/D5 H) position to access and perform compensation and control. Please refer to the SFR description in the following table, see Table25.4.3.

| SFR | Description | | Address |
|---|---|---|---|
| FOC_D_L | Field Oriented Control Data Low byte | | D4H |
| FOC_D_H | Field Oriented Control Data High byte | | D5H |
| | Parameters | Description | Reset Value |
| SFR_PAGE = 0 | VD_OFFSET | d-axis voltage offset | 0x0000H |
| SFR_PAGE = 1 | VQ_OFFSET | q-axis voltage offset | 0x0000H |
| SFR_PAGE = 3 | AS | Angle Supplement Data | 0x0000H |
| SFR_PAGE = 4 | CPU_ANG | CPU Angle Data Register | 0x0000H |
| SFR_PAGE = 5 | FOC_ANG | Park and Inverse Park transformation angle input<br>※ **Read: Theta for FOC angle.**<br>**Write: Theta offset.** | 0x0000H |
| SFR_PAGE = 6 | SVPWM_Amp | Amplitude value of SVPWM transformation | 0x4000H |

Table25.4.3 : FOC_D SFR

## 25.5 SMO Rotor Position Estimation Block

### 25.5.1 SMO Rotor Position Estimation Block Architecture

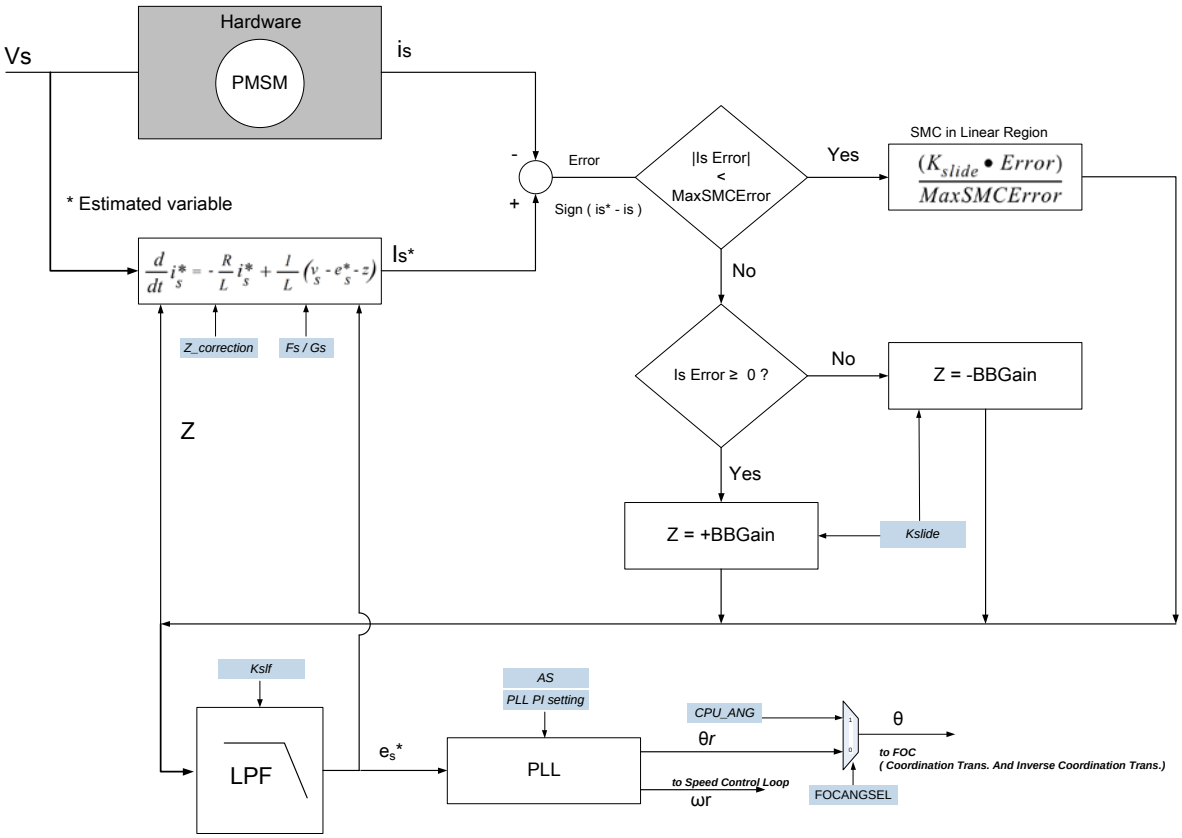


Figure 25.5.1 : SMO Rotor Position Estimation Block Architecture

### 25.5.2 SENSORLESS FOC For PMSM

An important part of the algorithm is how to calculate the commutation angle needed for FOC. This section of the application note explains the process of estimating commutation angle (θr) and motor speed (ωr).

The sensor-less control technique implements the FOC algorithm by estimating the position of the motor without using position sensors.

Motor position and speed are estimated based on measured currents and calculated voltages.

### 25.5.3 Motor Model

You can estimate the PMSM position by using a model of a DC Motor, which can be represented by winding resistance, winding inductance and BEMF, as shown in Figure 25.5.2.

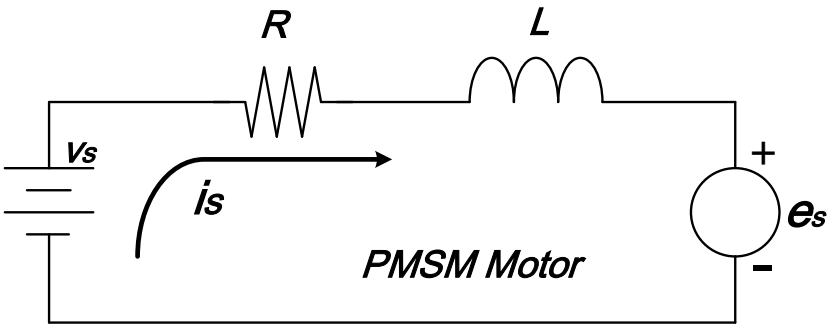


Figure 25.5.2 : Motor Model

From the motor model, the input voltage can be obtained:

$$v_s = Ri_s + L\frac{d}{dt}i_s + e_s$$

Where:

$i_s$ = Motor Current Vector
$v_s$ = Input Voltage Vector
$e_s$ = Back-EMF Vector
$R$ = Winding Resistance
$L$ = Winding Inductance
$T_s$ = Control Period

Motor current is obtained by solving for $i_s$:

$$\frac{d}{dt}i_s = \left(-\frac{R}{L}\right)i_s + \frac{1}{L}(v_s - e_s)$$

In the digital domain, this equation becomes:

$$\frac{i_s(n+1) - i_s(n)}{T_s} = \left(-\frac{R}{L}\right)i_s(n) + \frac{1}{L}(v_s(n) - e_s(n))$$

Solving for $i_s$:

$$i_s(n+1) = \left(1 - Ts \bullet \frac{R}{L}\right)i_s(n) + \frac{T_s}{L}(v_s(n) - e_s(n))$$

$$F = 1 - Ts \bullet \frac{R}{L}$$

$$G = \frac{T_S}{L}$$

F and G parameter can be setting via Fs and Gs SRF ( see Table25.5.1 and see Table25.5.2 ).

| SFR | Description | | Address |
|---|---|---|---|
| SMO_D1_L | Field Oriented Control Data1 Low byte | | BBH |
| SMO_D1_H | Field Oriented Control Data1 High byte | | BCH |
| | Parameters | Description | |
| SFR_PAGE = 0 | $G_S$ | Parameters GS for motor model | 0x7FFFH |
| SFR_PAGE = 1 | Kslide | Parameters Slide mode Gain for angle estimation | 0x3E80H |
| SFR_PAGE = 2 | SMO_ANGBAS | Parameters Angle Base for angle estimation | 0x0B2FH |
| SFR_PAGE = 3 | Z_correction | SMO Zgain correction: $Z_{gain(new)} = \frac{Z_{gain} \times Z_correction}{32767}$ | 0x7FFFH |
| SFR_PAGE = 4 | SMO_ANG | Estimated value of SMO angle | Read-Only |
| SFR_PAGE = 5 | BBGain | Parameters Slide mode Bang Bang Control Gain for angle estimation | 0x7FFFH |

Table25.5.1 : SMO_D1 SRF

| SFR | Description | | Address |
|---|---|---|---|
| SMO_D2_L | Field Oriented Control Data1 Low byte | | BDH |
| SMO_D2_H | Field Oriented Control Data1 High byte | | BEH |
| | Parameters | Description | |
| SFR_PAGE = 0 | $F_S$ | Parameters FS for motor model. | 0x7FFFH |

| | | | |
|---|---|---|---|
| SFR_PAGE = 1 | Kslf | Parameters LPF for BEMF $e_s$ estimation | 0x0064H |
| SFR_PAGE = 3 | MaxSMCError | MAXSMC Error for SMC in Linear Region | 0x7FFFH |
| SFR_PAGE = 4 | EST-SP | ω* (Output value of PLL-PI-Control) | Read-Only |

Table25.5.2 : SMO_D2 SRF

### 25.5.3 Current Observer

The position and speed estimator is based on a current observer. This observer is a digitized model of the motor. Variables and constants include:

(1) Motor Phase Current ($i_s$)
(2) Input voltage ($v_s$)
(3) BEMF ($e_s$)
(4) Winding resistance (R)
(5) Winding inductance (L)
(6) Control period ($T_s$)
(7) Output Correction Factor Voltage (z)

The digitized model provides a software representation of the hardware. However, in order to match the measured current and estimated current, the digitized motor model needs to be corrected using the closed loop, as shown in Figure 25.5.1.

Considering two motor representations, one in hardware (shaded area) and one in software, with the same input ($v_s$) fed into both systems, and matching the measured current ($i_s$) with estimated current ($i_s$*)from the model, we can presume that BEMF ($e_s$*) from our digitized model is the same as the BEMF ($e_s$) from the motor.

The sliding-mode controller has a limit value MaxSMCError. When the error value is lesser than the MaxSMCError, the output of sliding-mode controller works in the linear range as given by the equation beneath the PMSM block in Figure 25.5.1. $K_{slide}$ parameter can be setting via $K_{slide}$ SRF ( see Table25.5.1).

For an error value outside of the linear range, the output of the sliding mode controller is (+BBGain)/(-BBGain) depending on the sign of the error.

BBGain parameter can be setting via BBGain SRF ( see Table25.5.1).

A slide-mode controller, or SMC, is used to compensate the digitized motor model. A SMC consists of a summation point that calculates the sign of the error between measured current from the motor and estimated current from the digitized motor model. The computed sign of the error (+1 or -1) is multiplied by a SMC gain (K). The output of the SMC controller is the correction factor (Z). This gain is added to the voltage term from the digitized model, and the process repeats every control cycle until the error between measured current ($i_s$) and estimated current ($i_s$*) is zero (i.e., until the measured current and estimated current match).

### 25.5.4 BEMF Estimation

After compensating the digitized model, you have a motor model with the same variable values for the input voltage ($V_s$) and for current ($i_s$*). Once the digitized model is compensated, the next step is to estimate BEMF ($e_s$*) by filtering the correction factor (Z), as shown in Figure 25.5.1. The BEMF estimation ($e_s$*) is fed back to the model to update the variable $e_s$* after every control cycle. Values $e_\alpha$ and $e_\beta$ (vector components of $e_s$) are used for the estimated Theta calculation.

The Cut-off freq. of LPF (BEMF low pass filter) can be setting via Kslf SRF ( see Table25.5.2 ).

### 25.5.5 Rotor Position Calculation

PLL takes $e_\alpha$* and $e_\beta$* as input signals and uses PI Control to perform θr calculations. PI controller operating output is ω*. After converting the angle unit through SMO_ANGBAS (see Table25.5.1), ωr is obtained. Then an integral unit is designed to calculate θr and perform negative feedback operation. See Figure 25.5.3 for details. PI controller related functions and architecture will be explained in detail in Chapter 25.8 PI controller.

The SMO_ANGBAS unit conversion formula is as follows:

SMO_ANGBAS = 384 ● 64 / ( PWM_freq. ) ●(motor pole/2/60)

The calculation time of SMO Rotor Position Estimation block will cause time delay of θr. AS (page3 of FOC_D, Table25.4.3) can be used for angle compensation. Its compensation range is -128 ~ 127 degrade. CGF0X2AXX angle calculation is 384 degrade / 360°, see Figure 25.5.4.

The θ of FOC (see Figure 25.5.1), is designed with a Multiplexer that select signal is FOCANGSEL (MOTOR_CONT1[3], SFR Address = BFH). When FOCANGSEL= 1, FOC_ANG = CPU_ANG (page4 of FOC_D, Table25.4.3), if FOCANGSEL = 0, FOC_ANG = θr to FOC (see Figure 25.5.1).

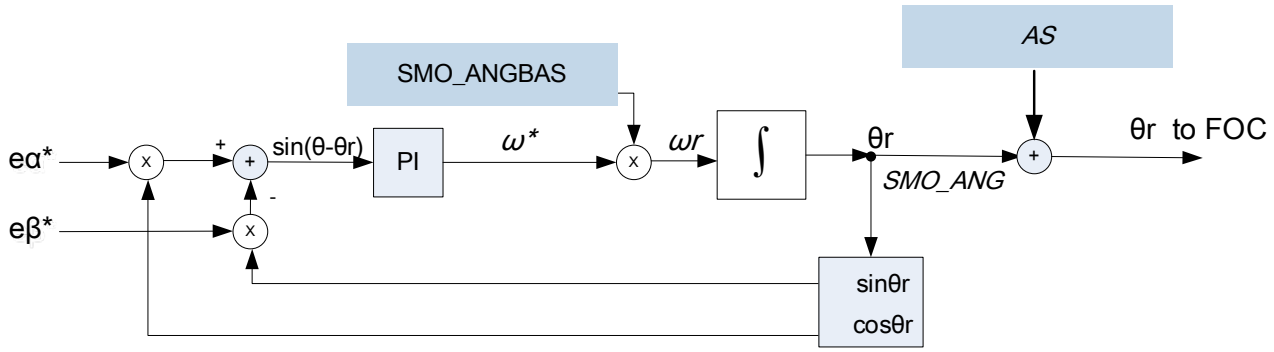


Figure 25.5.3 : PLL Architecture

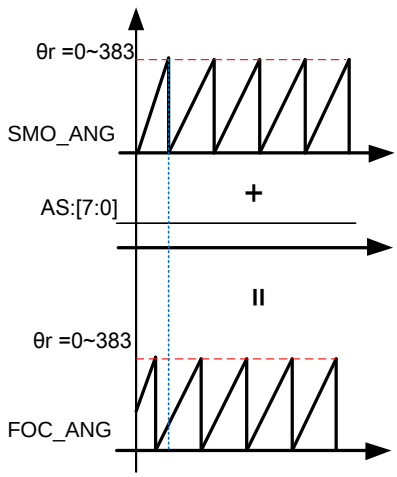


Figure 25.5.4 : Angle Supplement

### 25.5.6 SMO Rotor Position Estimation Block description and setting

In Inverse Coordinate Transformation Block, the Va, Vb Vα, Vβ value can be observed through XSFR VA, VB, VALPHA, and VBETA; Vq and Vd voltage value can be observed through the page0 and page1 of PI_OUT SFR.

In the SMO Rotor Position Estimation Block, the Zα, Zβ, iα*, iβ*, eα* and eβ* signal status can be observed through XSFR ZALPHA, ZBETA, ES_IALPHA, ES_IBETA, ES_EALPHA, and ES_EBETA. Please refer to the XSFR description in the Table25.5.3. The θr and ω* can be observed through the two SFR addresses SMO_D1 and SMO_D2.

For the related reading process, first set the SFR_PAGE (SFR Address = ECH) where the signal is located, and then read the corresponding SMO_D1 or SMO_D2 position data to read the signal value.

| XSFR | Description | Address | Characteristic |
|---|---|---|---|
| ZALPHA_L | The Z gain of EEMF Eα Data Register Low Byte | 1070H | Read Only |
| ZALPHA_H | The Z gain of EEMF Eα Data Register High Byte | 1071H | Read Only |
| ZBETA_L | The Z gain of EEMF Eβ Data Register Low Byte | 1068H | Read Only |
| ZBETA_H | The Z gain of EEMF Eβ Data Register High Byte | 1069H | Read Only |
| ES_IALPHA_L | Estimate Current Iα Data Register Low Byte | 1072H | Read Only |
| ES_IALPHA_H | Estimate Current Iα Data Register High Byte | 1073H | Read Only |
| ES_EALPHA_L | Estimate EEMF Eα Data Register Low Byte | 1074H | Read Only |
| ES_EALPHA_H | Estimate EEMF Eα Data Register High Byte | 1075H | Read Only |
| ES_IBETA_L | Estimate Current Iβ Data Register Low Byte | 106AH | Read Only |
| ES_IBETA_H | Estimate Current Iβ Data Register High Byte | 106BH | Read Only |
| ES_EBETA_L | Estimate EEMF Eβ Data Register Low Byte | 106CH | Read Only |
| ES_EBETA_H | Estimate EEMF Eβ Data Register High Byte | 106DH | Read Only |

Table25.5.3 : BEMF Estimation Signals observe

The reading process is as follows :

(1) Read $Z_\alpha$ signal value : Read XSFR ZALPHA content directly (address = 1070H / 1071H)

(2) Read $Z_\beta$ signal value : Read XSFR ZBETA content directly (address = 1068H / 1069H)

(3) Read $i_\alpha$* signal value : Read XSFR ES_IALPHA content directly (address = 1072H / 1073H)

(4) Read $i_\beta$* signal value : Read XSFR ES_IBETA content directly (address = 106AH / 106BH)

(5) Read $e_\alpha$* signal value : Read XSFR ES_EALPHA content directly (address = 1074H / 1075H)

(6) Read $e_\beta$* signal value : Read XSFR ES_EBETA content directly (address = 106CH / 106DH)

(7) Read θr signal value :
Step1 : Setting SFR_PAGE = 4(Address=ECH)
Step2 : Read the SMO_ANG SFR value of SMO_D1 (address = BCH / BBH)

(8) Read ω* signal value :
Step1 : Setting SFR_PAGE = 4(Address=ECH)
Step2 : Read the EST-SP SFR value of SMO_D2 (address = BEH / BDH)

## 25.6 SVPWM Engine Block

### 25.6.1 SVPWM Engine Block Architecture

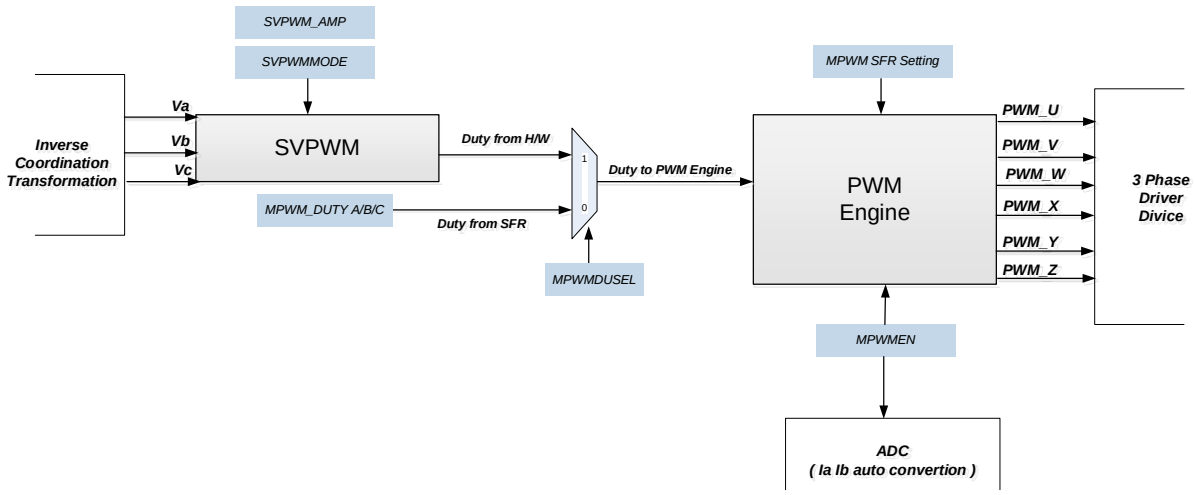


Figure 25.6.1 : SVPWM Engine Block Architecture

### 25.6.2 SVPWM Engine Block Architecture

The final step in the vector control process is to generate pulse-width modulation signals for the 3-phase motor voltage signals. If you use Space Vector Pulse Width Modulation (SVPWM) techniques, the process of generating the pulse width for each of the three phases is reduced to a few simple equations. In this implementation, the Inverse Clarke Transform has been folded into the SVPWM routine, which further simplifies the calculations.

Each of the three inverter outputs can be in one of two states. The inverter output can be connected to either the plus (+) bus rail or the minus (-) bus rail, which allows for $2^3$ = 8 possible states of the output as shown in Table 25.6.1.

The two states in which all three outputs are connected to either the plus (+) bus or the minus (-) bus are considered null states because there is no line-to-line voltage across any of the phases. These are plotted at the origin of the SVM star. The remaining six states are represented as vectors with 60 degree rotation between each state, as shown in Figure 25.6.2.

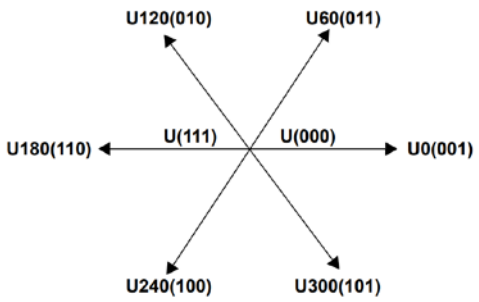


Figure 25.6.2 : Space Vector Pulse Width Modulation (SVPWM)

The process of SVM allows the representation of any resultant vector by the sum of the components of the two adjacent vectors. In Figure 25.6.3, $U_{OUT}$ is the desired resultant. It lies in the sector between U60 and U0. If during a given PWM period T, U0 is output for T1/T and U60 is output for T2/T, the average for the period will be $U_{OUT}$.

T0 = Null Vector

T = T1 + T2 + T0 = PWM Period

UOUT = (T1/T • U0) + (T2/T • U60)

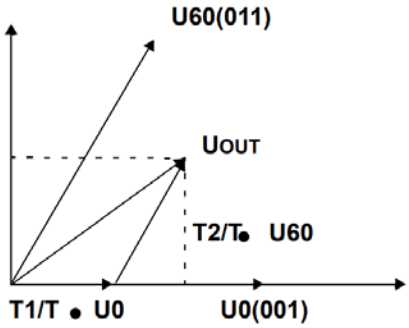


Figure 25.6.3 : AVERAGE SVPWM

T0 represents a time where no effective voltage is applied into the windings; that is, where a null vector is applied. The values for T1 and T2 can be extracted with no extra calculations by using a modified Inverse Clark transformation. If you reverse Vα and Vβ, a reference axis is generated that is shifted by 30 degrees from the SVM star. As a result, for each of the six segments, one axis is exactly opposite that segment and the other two axes symmetrically bound the segment. The values of the vector components along those two bounding axis are equal to T1 and T2.

| Phase C | Phase B | Phase A | $V_{ab}$ | $V_{bc}$ | $V_{ca}$ | $V_{ds}$ | $V_{qs}$ | Vector |
|---|---|---|---|---|---|---|---|---|
| 0 | 0 | 0 | 0 | 0 | 0 | 0 | 0 | U(000) |
| 0 | 0 | 1 | $V_{DC}$ | 0 | $-V_{DC}$ | $2/3V_{DC}$ | 0 | $U_0$ |
| 0 | 1 | 1 | 0 | $V_{DC}$ | $-V_{DC}$ | $V_{DC}/3$ | $V_{DC}/3$ | $U_{60}$ |
| 0 | 1 | 0 | $-V_{DC}$ | $V_{DC}$ | 0 | $-V_{DC}/3$ | $V_{DC}/3$ | $U_{120}$ |
| 1 | 1 | 0 | $-V_{DC}$ | 0 | $V_{DC}$ | $-2V_{DC}/3$ | 0 | $U_{180}$ |
| 1 | 0 | 0 | 0 | $-V_{DC}$ | $V_{DC}$ | $-V_{DC}/3$ | $-V_{DC}/3$ | $U_{240}$ |
| 1 | 0 | 1 | $V_{DC}$ | $-V_{DC}$ | 0 | $V_{DC}/3$ | $-V_{DC}/3$ | $U_{300}$ |
| 1 | 1 | 1 | 0 | 0 | 0 | 0 | 0 | U(111) |

Table25.6.1 : SPACE VECTOR PULSE WIDTH MODULATION INVERTER STATES

### 25.6.3 7-Segment SVPWM

MDE is set to 7-Segment SVPWM by default. The control signal to select SVPWM mode is SVPWMMODE (see Table17.6.2). When SVPWMMODE = 0, MDE is set to 7-Segment SVPWM mode. 7-Segment SVPWM output voltage, as shown in Figure 25.6.4.

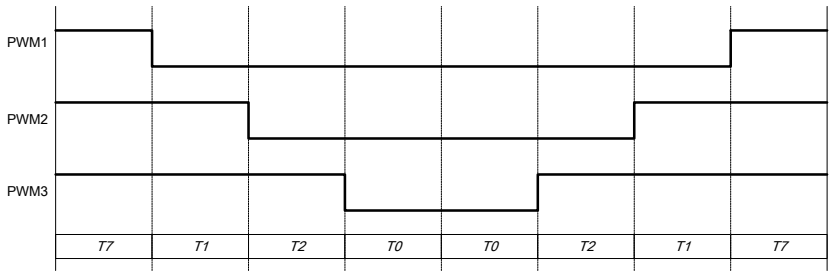


Figure25.6.4 : 7-segment SVPWM output voltage

| MOTOR_CONT2 | | | Address = 9FH | | | Reset Value = 0x00H | | |
|---|---|---|---|---|---|---|---|---|
| Motor Control Register 2 | | | | | | | | |
| | ---- | ---- | ---- | SVPWM MODE | SVPWM PS | ---- | IAE SOFEN | ---- |
| Bit | | | | 4 | | | | |
| Type | | | | R/W | | | | |

| | |
|---|---|
| SVPWMMODE [4] | SVPWM mode select:<br>0 : 7-Segment SVPWM mode.<br>1 : 5-Segment SVPWM mode. |

Table25.6.2 : MOTOR_CONT2. SVPWMMODE SFR Description

### 25.6.4 5-Segment SVPWM

When SVPWMMODE = 1, MDE is set to 5-Segment SVPWM mode. 5-Segment SVPWM output voltage, as shown in Figure 25.6.5.

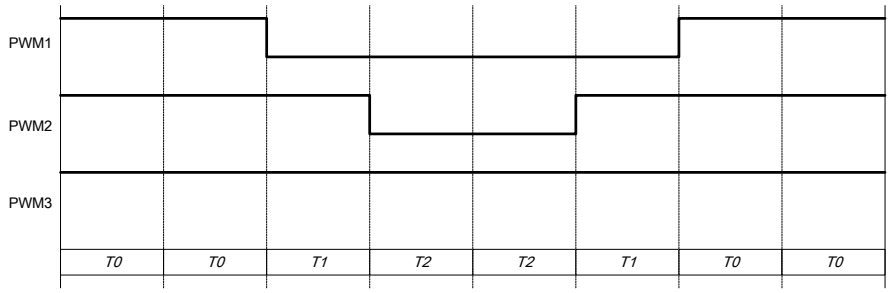


Figure25.6.5 : 5-segment SVPWM output voltage

### 25.6.5 SVPWM Over Modulation

MDE SVPWM Engine can use the Over Modulation function. You can set the SFR SVPWM_Amp to amplify the Va / Vb / Vc amplitude to achieve Over Modulation. The SVPWM_Amp setting process is as follows:

Step1 : Setting SFR_PAGE = 6(Address=ECH)
Step2 : Access SVPWM_Amp of FOC_D value

### 25.6.6 Motor PWM Output Setting

Motor PWM Engine is based MPWMEN ( see Table25.6.3, MOTOR_CONT1[5]) to active PWM counter, when MPWMEN = 1, Motor PWM output ( U, V, W, X, Y, Z ) and motor current Ia and Ib of ADC auto conversion is active.

MPWMDUSEL (see Table25.6.3, MOTOR_CONT1[6]) can select the Duty input source of Motor PWM. When MPWMDUSEL = 0, Motor PWM determines PWM Duty by PWM_DUTY_A / PWM_DUTY_B / PWM_DUTY_C (see Table17.6.4), and outputs PWM signal.

MPWMDUSEL = 1, the calculated PWM Duty value of Va, Vb and Vc is directly input to the SVPWM Engine for PWM modulation.

| MOTOR_CONT1 Motor Control Register 1 | | Address = BFH | | | | Reset Value = 0x00H | | |
|---|---|---|---|---|---|---|---|---|
| Bit | ---- | MPWMDUSEL | MPWMEN | IQINSEL | FOCANGSEL | USER_PI_ACT | GEN_LPF_ACT | SPFB FILTER |
| | | 6 | 5 | | | | | |
| Type | | R/W | R/W | | | | | |

| | |
|---|---|
| MPWMDUSEL<br>[6] | MPWM duty select :<br>0 : From PWM_DUTY_A /B /C ( MPWMDAT, SFR Address = E1H/E2H )<br>1 : From SVPWM H/W |
| MPWMEN<br>[5] | MPWM timer run control enable:<br>0 : Disable<br>1 : Enable<br>MPWMEN =1, ADC CH0 & CH1 Auto Converter: |

Table25.6.3 : MOTOR_CONT1 SFR Description

Period of Motor PWM is based on MPWM_CYC (see Table25.6.4) setting value. The base frequency of Motor PWM counter is 48MHz. The counter counts up to MPWM_CYC and then counts down to 0 (see Figure25.6.6). Therefore, the value set by MPWM_CYC determines the frequency of Motor PWM. For example : MPWM_CYC = 1250, Period of Motor PWM = 1250 x 2 x 1/(48MHz) = 52.08us, Freq. of Motor PWM is 19.2KHz.

| SFR | Description | | Address |
|---|---|---|---|
| MPWMDATL | MPWM Data Low Byte(SYNC) | | E1H |
| MPWMDATH | MPWM Data High Byte(SYNC) | | E2H |
| | Parameters | Description | Reset Value |
| SFR_PAGE = 0 | MPWM_CYC | Motor PWM cycle value | 0x04B0H |
| SFR_PAGE = 1 | PWM_DUTY_A | Motor PWM Duty value for Phase A | 0x0258H |
| SFR_PAGE = 2 | PWM_DUTY_B | Motor PWM Duty value for Phase B | 0x0258H |
| SFR_PAGE = 3 | PWM_DUTY_C | Motor PWM Duty value for Phase C | 0x0258H |

Table25.6.4 : MPWMDAT SFR Description

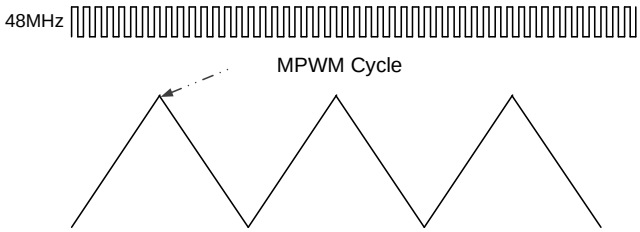


Figure25.6.6 : Motor PWM is count up and down timer

Motor PWM output (U) has 4 type mode to be setting. High side PWM (U) can be setting mode by PWMU_MOD (see Table25.6.5) , Low side PWM (U) can be setting mode by PWMX_MOD (see Table25.6.5), the 4 type mode is “Force Low”, “Force High”, “Force Low”, “Active High” and “Active Low”.

In order to connect with the 3 phase Gate-driver and optimize PCB Layout considerations, the Motor PWM output (U, V, W, X, Y, Z) has a Swap function, which can be performed via HALFSWAP, ALLSWAP, UWXZSWAP (see Table25.6.5) A combination of Swap, as shown in Figure25.6.7.

MPWMCONT1(SYNC) Address = E3H Reset Value = 0x00H
MPWM Control Register

| Bit | ----- | HALF SWAP | ALL SWAP | UWXZ SWAP | PWMX_MOD | | PWMU_MOD | |
|---|---|---|---|---|---|---|---|---|
| | 7 | 6 | 5 | 4 | 3 | 2 | 1 | 0 |
| Type | X | R/W | R/W | R/W | R/W | R/W | R/W | R/W |

| | |
|---|---|
| HALFSWAP [6] | Half pin swap (X,V swap),(Y,W swap) and (X,W swap)<br>0: Normal<br>1: Half change |
| ALLSWAP [5] | High side and Low side pin swap(U->X , X->U、V->Y,Y->V、W->X,X->W)<br>0: Normal<br>1: Inverse |
| UWXZSWAP [4] | U、W pin swap and X、Z pin swap<br>0: Normal<br>1: Swap |
| PWMX_MOD [3:2] | Phase U Low-side (X) output mode select :<br>00: Force Low 10: Active High<br>01: Force High 11: Active Low |
| PWMU_MOD [1:0] | Phase U High-side (U) output mode select :<br>00: Force Low 10: Active High<br>01: Force High 11: Active Low |

Table25.6.5 : MPWMCONT1 SFR Description

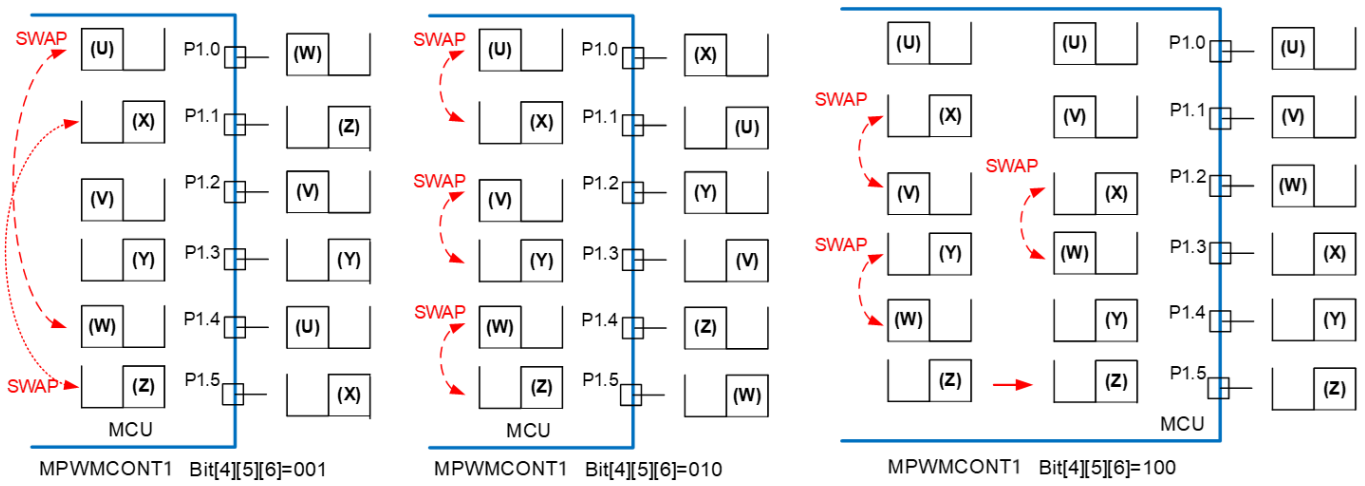


Figure25.6.7 : PWM Pin swap Unit Architecture

Motor PWM output ( V, W ) has 4 type mode to be setting. High side PWM ( V, W ) can be setting mode by PWMV/W_MOD (see Table25.6.6) , Low side PWM ( V, W ) can be setting mode by PWMY/Z_MOD (see Table25.6.6), the 4 type mode is “Force Low”, “Force High”, “Force Low”, “Active High” and “Active Low”.

MPWMCONT2(SYNC) Address = E7H Reset Value = 0x00H
MPWM Control Register

| Bit | PWMZ_MOD | | PWMW_MOD | | PWMY_MOD | | PWMV_MOD | |
|---|---|---|---|---|---|---|---|---|
| | 7 | 6 | 5 | 4 | 3 | 2 | 1 | 0 |
| Type | R/W | R/W | R/W | R/W | R/W | R/W | R/W | R/W |

| | | |
|---|---|---|
| PWMZ_MOD [7:6] | Phase W Low-side (Z) output mode select :<br>00: Force Low<br>01: Force High | 10: Active High<br>11: Active Low |
| PWMW_MOD [5:4] | Phase W High-side (W) output mode select :<br>00: Force Low<br>01: Force High | 10: Active High<br>11: Active Low |
| PWMY_MOD [3:2] | Phase V Low-side (Y) output mode select :<br>00: Force Low<br>01: Force High | 10: Active High<br>11: Active Low |
| PWMV_MOD [1:0] | Phase V High-side (V) output mode select :<br>00: Force Low<br>01: Force High | 10: Active High<br>11: Active Low |

Table25.6.6 : MPWMCONT2 SFR Description

MPWMDT(see Table25.6.7) Compensation PWM output with Dead-Time is use to prevent short-though between high-side and low-side power device. Dead-time setting example : if MPWMDT = 100, Dead Time = 50 x ( 1 / 48MHz ) = 2.08us.

MPWMDT (SYNC) Address = E5H Reset Value = 0x78H
Motor PWM Dead-Time Register

| Bit | MPWMDT[7:0] | | | | | | | |
|---|---|---|---|---|---|---|---|---|
| | 7 | 6 | 5 | 4 | 3 | 2 | 1 | 0 |
| Type | R/W | R/W | R/W | R/W | R/W | R/W | R/W | R/W |

Table25.6.7 : MPWMDT SFR Description

Via MPWMINV (see Table25.6.8) setting , Motor U,V,W X,Y,Z PWM output support Inverse function that is to inverse the PWM output signal at the last stage output.

MPWMINV (SYNC) Address = E4H Reset Value = 0x00H
MPWM Inverse Selection Register

| Bit | ----- | ----- | ZINV | WINV | YINV | VINV | XINV | UINV |
|---|---|---|---|---|---|---|---|---|
| | 7 | 6 | 5 | 4 | 3 | 2 | 1 | 0 |
| Type | X | X | R/W | R/W | R/W | R/W | R/W | R/W |

| | |
|---|---|
| ZINV [5] | Low-side PWM Z output inverse select :<br>0 : Non-inverse<br>1 : Inverse |
| WINV [4] | High-side PWM W output inverse select :<br>0 : Non-inverse<br>1 : Inverse |
| YINV [3] | Low-side PWM Y output inverse select :<br>0 : Non-inverse |

| | |
|---|---|
| | 1 : Inverse |
| VINV<br>[2] | High-side PWM V output inverse select :<br>0 : Non-inverse<br>1 : Inverse |
| XINV<br>[1] | Low-side PWM X output inverse select :<br>0 : Non-inverse<br>1 : Inverse |
| UINV<br>[0] | High-side PWM U output inverse select :<br>0 : Non-inverse<br>1 : Inverse |

Table25.6.8 : MPWMINV SFR Description

Figure25.6.8 illustrates the waveform output by Motor PWM when HIGHSIDE, LOWSIDE, MPWMINV and MPWMDT are set at the same time.

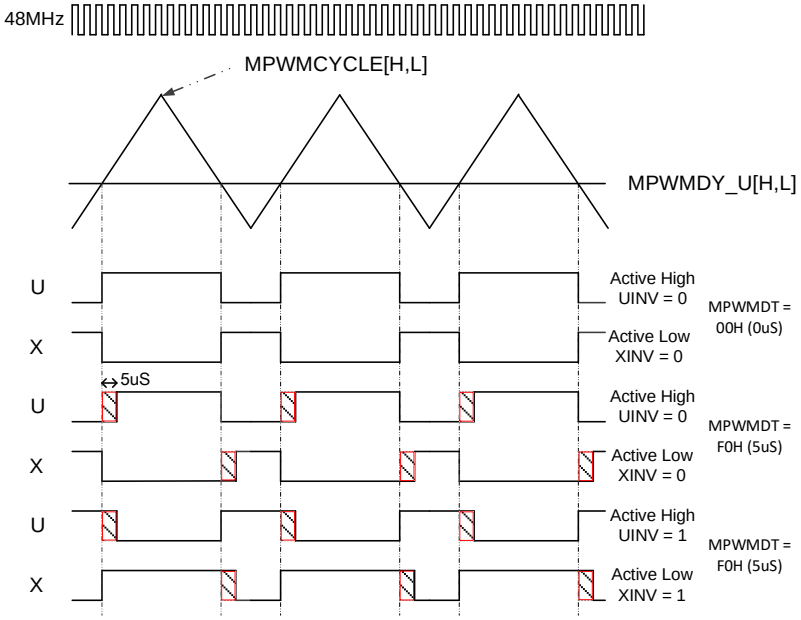


Figure25.6.8 PWM Output with Dead Time and PWM mode

MDE provides motor reverse setting and simply set SVPWMPS (see inverse Table25.6.9) to reverse the motor.

| MOTOR_CONT2<br>Motor Control Register 2 | Address = 9FH | | | Reset Value = 0x00H | | |
|---|---|---|---|---|---|---|
| | ---- | SVPWMMODE | SVPWMPS | ---- | IAE<br>SOFEN | ---- |
| Bit | | | 3 | | | |
| Type | | | R/W | | | |

| | |
|---|---|
| SVPWMPS<br>[3] | SVPWM output phase sequence:<br>0 : Positive sequence (A、B、C)<br>1 : Negative sequence (B、A、C) |

Table25.6.9 : MOTOR_CONT2. SVPWMPS SFR Description

## 25.7 Speed Control Loop Block

### 25.7.1 Speed Control Loop Block Architecture

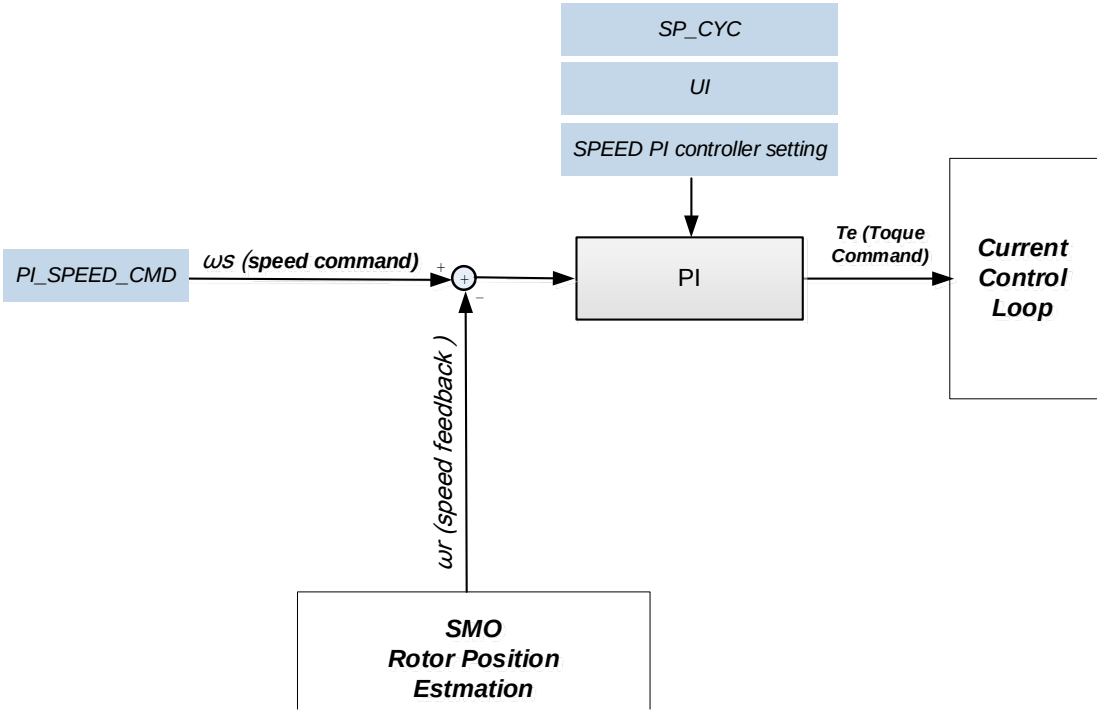


Figure 25.7.1 : Speed Control Loop Block Architecture

### 25.7.2 Speed Control Loop Block description and setting

In the Speed Control Loop Block, the speed command *ωs* and the estimated speed signal *ωr* are used to calculate the Toque control quantity *Te* through the speed control law. *Te* is also the current command of the Current Control Loop Block. The speed control law is controlled using PI Control. PI controller related functions and architecture will be explained in detail in Chapter 25.8 PI controller.

PI controller of Speed Control Loop Block, contains an enable signal SPEEDEN (see Table25.7.1), when SPEEDEN = 1, the PI controller will be active the motor speed control loop.

| FOCCONT Field Oriented Control Register | | | Address = D6H | | Reset Value = 0x00H | |
|---|---|---|---|---|---|---|
| Bit | PI CLEAR | ESTCR | INV ADCD | ADCTRIG | PLLEN | SPEEDEN |
| | | | | | | 0 |
| Type | | | | | | R/W |

| | |
|---|---|
| SPEEDEN | SPEED-Control enable: |
| [0] | 0: Disable |
| | 1: Enable |

Table25.7.1 : FOCCONT. SPEEDEN SFR Description

The Speed Control Loop Block contains a speed loop sampling frequency adjustment SRF SP_CYC (see Table25.7.2), and the filled value of SP_CYC[7:0] is the following formula:

SP_CYC = PWM Freq. / speed loop sampling Freq.

For example : PWM Freq. is 20KHz, and the designed speed loop sampling frequency is 1KHz, then SP_CYC = 20KHz / 1KHz = 20

| SP_CYC<br>SPEED Loop control cycle | | | Address = EDH | | | | Reset Value = 0x26H | |
|---|---|---|---|---|---|---|---|---|
| Bit | SP-CYC[7:0] | | | | | | | |
| | 7 | 6 | 5 | 4 | 3 | 2 | 1 | 0 |
| Type | W | W | W | W | W | W | W | W |

Table25.7.2 : SP_CYC SFR Description

## 25.8 PI Controller

### 25.8.1 PI Controller Block Architecture

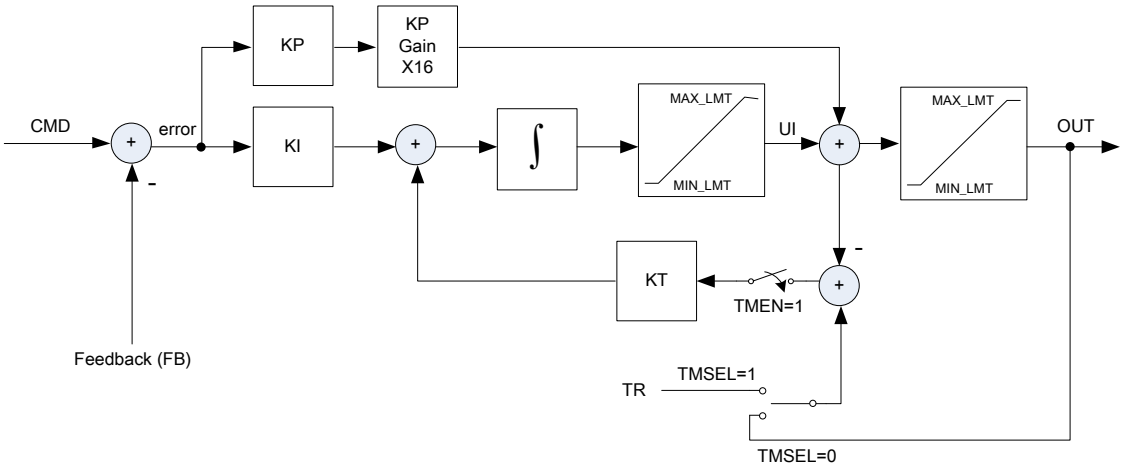


Figure 25.8.1 : PI Block Architecture

### 25.8.2 PI controller Block description and setting

MDE has four PI controllers: IQ, ID, PLL and SPEED Loop. Their architectures are the same (see Figure 25.8.1: PI Block Architecture). If you write 1 to PICLEAR (see Table25.8.1), you can reset IQ , ID, PLL and SPEED Loop 4 PI controllers to initial status. In addition, PLL and SPEED Loop can be enabled by PLLEN and SPEEDEN (see Table25.8.1).

| FOCCONT<br>Field Oriented Control Register | Address = D6H | | | | Reset Value = 0x00H | |
|---|---|---|---|---|---|---|
| Bit | PICLEAR | ESTCR | INVADCD | ADCTRIG | PLLEN | SPEEDEN |
| | 7 | | | | 1 | 0 |
| Type | R/W | | | | R/W | R/W |
| PICLEAR<br>[7] | Clear register value of PI-Control:<br>0: Disable<br>1: Enable | | | | | |
| PLLEN<br>[1] | PLL-Control enable:<br>0: Disable<br>1: Enable | | | | | |
| SPEEDEN<br>[0] | SPEED-Control enable:<br>0: Disable<br>1: Enable | | | | | |

Table25.8.1 : PICLEAR/ PLLEN/ SPEEDEN SFR Description

The PI controller has a total of 12 control parameters: CMD, KP, KI, MIN_LMT, MAX_LMT, KT, TR, FB, UI, OUT, GAIN, and TMSR (see Table 25.8.2). Except for GAIN and TMSR, which do not have pagination, all other parameters have four pages each for four PIs to set parameters. Among them, KP, KI, MIN_LMT, MAX_LMT, and KT can only be written, and the others can be read and written. The setting method is selected by SFR_PAGE. SFR_PAGE=0 selects IQ PI; SFR_PAGE=1 selects ID PI; SFR_PAGE=2 selects PLL PI; SFR_PAGE=3 selects SPEED PI, the setting process is:

CMD ( PI command ) : Access PI_CMD ( SFR Address 0xA7H and 0xA6H )
UI ( integral value ) : Access PI_UI ( SFR Address 0x9EH and 0x9DH )
OUT ( output value ) : Access PI_OUT ( SFR Address 0xADH and 0xACH )
FB ( feedback value ) : Access PI_FB ( SFR Address 0xAFH and 0xAEH )
KP ( PI KP Gain ) : Write PI_KP ( SFR Address 0x94H and 0x93H )
KI ( PI KI Gain ) : Write PI_KI ( SFR Address 0x92H and 0x91H )
MAX_LMT ( PI output Maximum Limit ) : Write PI_MAX_LMT( SFR Address 0x96H and 0x95H )
MIN_LMT ( PI output Minimum Limit ) : Write PI_MIN_LMT( SFR Address 0xB3H and 0xB2H )
KT ( PI KT Gain ) : Write PI_KT ( SFR Address 0xDFH and 0xDEH )

| SFR | Description | Address | Reset value | R/W |
|---|---|---|---|---|
| PI_GAIN | PI-control KPx16 Gain Select Register | E6H | F7H | R/W |
| PI_TMSR | PI-control Tracking Mode Select Register | D7H | 00H | R/W |
| PI_KI_L | PI-control KI Parameter Low byte | 91H | 00H | Write Only |
| PI_KI_H | PI-control KI Parameter High byte | 92H | 00H | Write Only |
| PI_KP_L | PI-control KP Parameter Low byte | 93H | 00H | Write Only |
| PI_KP_H | PI-control KP Parameter High byte | 94H | 00H | Write Only |
| PI_MAX_LMT_L | PI-control Maximum Limit Data Low byte | 95H | FFH | Write Only |
| PI_MAX_LMT_H | PI-control Maximum Limit Data High byte | 96H | 7FH | Write Only |
| PI_MIN_LMT_L | PI-control Minimal Limit Data Low byte | B2H | 01H | Write Only |
| PI_MIN_LMT_H | PI-control Minimal Limit Data High byte | B3H | 80H | Write Only |
| PI_CMD_L | PI-control Command Data Low byte | A6H | 00H | R/W |
| PI_CMD_H | PI-control Command Data High byte | A7H | 00H | R/W |
| PI_UI_L | PI-control Integral Data Low byte | 9DH | 00H | R/W |
| PI_UI_H | PI-control Integral Data High byte | 9EH | 00H | R/W |
| PI_OUT_L | PI-control Output Data Low byte | ACH | 00H | R/W |
| PI_OUT_H | PI-control Output Data High byte | ADH | 00H | R/W |
| PI_FB_L | PI-control Feedback Data Low byte | AEH | 00H | R/W |
| PI_FB_H | PI-control Feedback Data High byte | AFH | 00H | R/W |
| PI_TR_L | PI-control TR Parameter Low byte | AAH | 00H | R/W |
| PI_TR_H | PI-control TR Parameter High byte | ABH | 00H | R/W |
| PI_KT_L | PI-control KT Parameter Low byte | DEH | 00H | Write Only |
| PI_KT_H | PI-control KT Parameter High byte | DFH | 00H | Write Only |

Table 25.8.2 : PI SFR List

All four PI controllers can amplify the error in proportional term by 16 times, and then connect them in series to KP. The amplification enable SFR setting is placed in PI_GAIN (see Table25.8.3), and the PLL and SPEED UI (see Table 25.8.1) Before enable, the initial value of the integral can be set through PI_UI (SFR Address = 0x9EH / 0x9DH).

PI_GAIN Address = E6H Reset Value = 0xF7H
PI KPx16 Gain Select Register

| | IQKPGEN | --- | IDKPGEN | --- | SPKPGEN | --- | PLLKPEN | --- |
|---|---|---|---|---|---|---|---|---|
| Bit | 7 | 6 | 5 | 4 | 3 | 2 | 1 | 0 |
| Type | R/W | --- | R/W | --- | R/W | --- | R/W | --- |

| | |
|---|---|
| IQKPGEN<br>[7] | IQ KP Gain enable:<br>0: Disable<br>1: Enable |
| IDKPGEN<br>[5] | ID KP Gain enable:<br>0: Disable<br>1: Enable |
| SPKPGEN<br>[3] | SPEED KP Gain enable:<br>0: Disable |

| | |
|---|---|
| | 1: Enable |
| PLLKPGEN<br>[1] | PLL KP Gain enable:<br>0: Disable<br>1: Enable |

Table25.8.3 : PI_GAIN SFR Description

In addition, bumpless control is added to the PI architecture, and the control switch can be set by PI_TMSR SFR. The content of PI_TMSR SFR is shown in Table 25.8.4.

PI_TMSR Address = D7H Reset Value = 0x00H

PI Tracking Mode Select Register

| | IQ_TM SEL | IQ_TM EN | ID_TM SEL | ID_TM EN | SP_TM SEL | SP_TM EN | PLL_TM SEL | PLL_TM EN |
|---|---|---|---|---|---|---|---|---|
| Bit | 7 | 6 | 5 | 4 | 3 | 2 | 1 | 0 |
| Type | R/W | R/W | R/W | R/W | R/W | R/W | R/W | R/W |

| | |
|---|---|
| IQ_TMSEL<br>[7] | IQ-Tracking Mode Select:<br>0: Auto Mode<br>1: Manual Mode |
| IQ_TMEN<br>[6] | IQ-Tracking Mode Enable:<br>0: Disable<br>1: Enable |
| ID_TMSEL<br>[5] | ID-Tracking Mode Select:<br>0: Auto Mode<br>1: Manual Mode |
| ID_TMEN<br>[4] | ID-Tracking Mode Enable:<br>0: Disable<br>1: Enable |
| SP_TMSEL<br>[3] | SPEED-Tracking Mode Select:<br>0: Auto Mode<br>1: Manual Mode |
| SP_TMEN<br>[2] | SPEED -Tracking Mode Enable:<br>0: Disable<br>1: Enable |
| PLL_TMSEL<br>[1] | PLL-Tracking Mode Select:<br>0: Auto Mode<br>1: Manual Mode |
| PLL_TMEN<br>[0] | PLL-Tracking Mode Enable:<br>0: Disable<br>1: Enable |

Table25.8.4 : PI_TMSR SFR Description

### 25.8.3 User PI controller Block description and setting

MDE provides an independent PI for users to use, and its architecture is shown in Figure 25.8.2. Its related parameters are CMD, KP, KI, MAX_LMT, MIN_LMT, UI, OUT, and FB, which are placed in corresponding Page 4 of PI SFR. Therefore, when using it, you must set SFR_PAGE=4 before selecting USER PI.

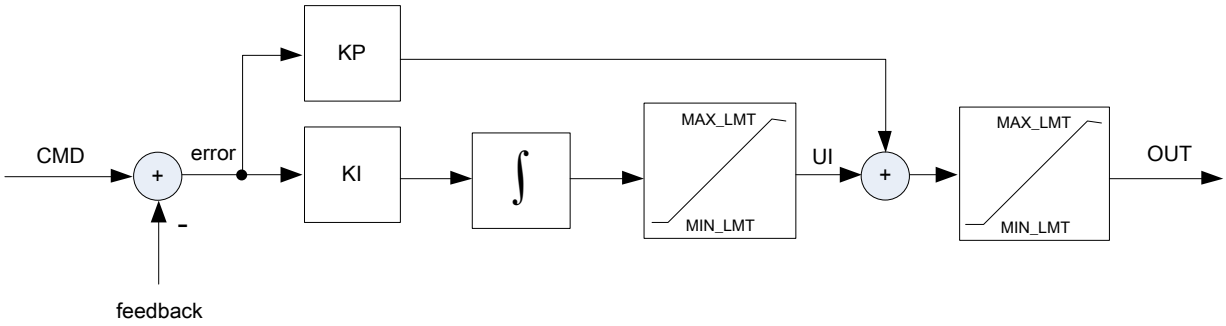


Figure 25.8.2 : User PI Block Architecture

## 25.9 IPD ( Initial Position Detection )

Initial Position Detection (IPD) is the method to detect the motor position before it spins up. It uses the characteristic of magnetic field varying when driving with current in motor winding inductance to determine the rotor initial position. We setting the AOCP short level and apply PWM pattern across two of the three phases: VW, WV, UV, VU, WU, and UW sequentially and the PWM pattern will be stopped when the AOCP short level is reached. The minimum time that reaches the AOCP short level among the 4 or 6 PWM patterns is the rotor position before it spins up. See Figure 25.9.1.

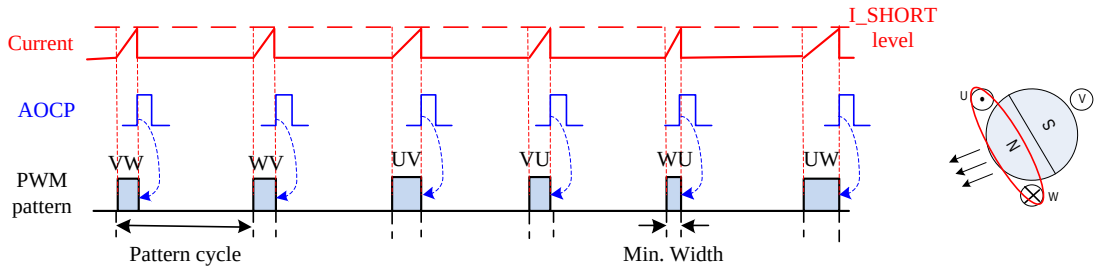


Figure 25.9.1 : IPD principle

### 25.9.1 IPD Control Register

IPD ( initial position detection ) can choose to use 6 patterns or 4 patterns (set by IPDPNS in Table 25.9.1 and see Figure 25.9.2) to search for the initial position of the rotor. There are 4 different settings for the sending interval between each pattern (set by IPDPCYC in Table25.9.1), after setting IPDPNS and IPDPCYC, write "1" in IPD_CTRL bit [0] (IPDSTR) and start IPD detection. When the IPD_CTRL bit [7] (IPDS) is "1", it means that the IPD is detecting. When IPDS=0, the initial position result of the detection will be stored in the IPD_CTRL bits [6:4] (IPDMIN).

Since IPD detection uses the speed of magnetic saturation (compared with the time speed of overcurrent) to determine the initial position of the rotor, if you find that the width of the printed pattern is the same during detection, you can try to adjust Table 25.9.1 The I_SHORT value enables the initial position of the rotor to be determined smoothly.

| IPD_CTRL | Address = A5H | | | | | Reset Value = 0x18H | | |
|---|---|---|---|---|---|---|---|---|
| Initial Position Detection Control Register | | | | | | | | |
| | IPDS | IPDMIN | | | IPDPNS | IPDCYC | | IPDSTR |
| Bit | 7 | 6 | 5 | 4 | 3 | 2 | 1 | 0 |
| Type | R | R | R | R | R/W | R/W | R/W | R/W |

| | | |
|---|---|---|
| IPDS<br>[7] | IPD State:<br>0:Normal<br>1:Busy | |
| IPDMIN<br>[6:4] | IPD Minimum Pattern:<br>001: Pattern1<br>011: Pattern3<br>101: Pattern5 | <br>010: Pattern2<br>100: Pattern4<br>110: Pattern6 |
| IPDPNS<br>[3] | IPD Pattern Number Select:<br>0: 4 pattern<br>1: 6 pattern | |
| IPDPCYC<br>[2:1] | IPD Pattern Cycle:<br>00: 13ms (48MHz Count)<br>10: 54ms (12MHz Count) | <br>01: 27ms (24MHz Count)<br>11: 110ms (6MHz Count) |
| IPDSTR<br>[0] | IPD Start:<br>1: Start IPD | |

Table25.9.1 : IPD_CTRL SFR Description

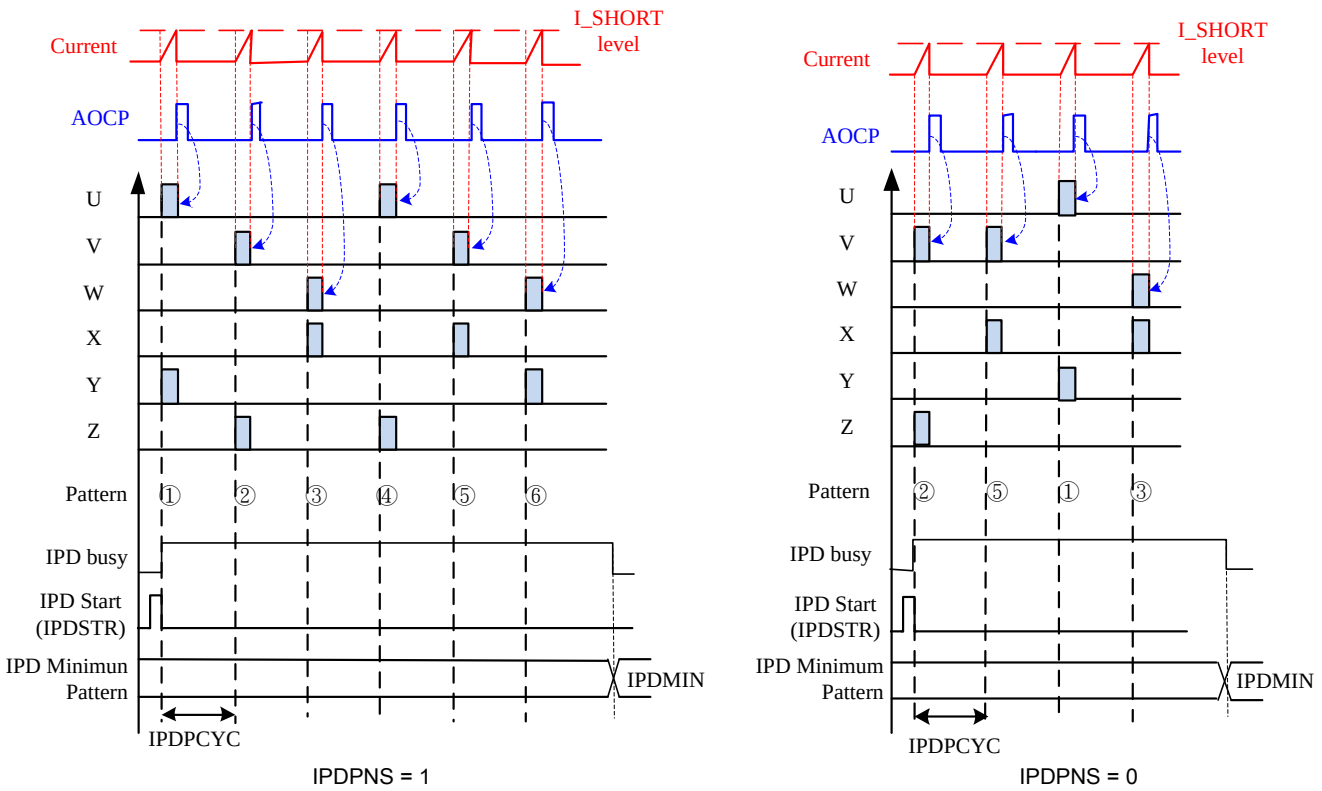


Figure 25.9.2 : IPD for rotor position detect before spin up in 6-pattern or 4-pattern

## 25.9.2 IPD Pattern Define Register

The PWM of which upper side PWM or lower side PWM should be turned on at the same time according to the IPD pattern can also be set by user.

For example, the initial value of IPDPAT21_DEF shown in the following table is 0xEB, which means pattern2 high/low side on define = 0xE：high side PWM_W on，low side PWM_Y on；pattern1 high/low side on define = 0xB：high side PWM_V on，low side PWM_Z on.

By analogy, the initial value of IPDPAT43_DEF is 0x96, which means that the high side PWM_V of pattern 4 is on and the low side PWM_X is on; the high side PWM_U of pattern 3 is on and the low side PWM_Y is on. The initial value of IPDPAT65_DEF is 0x7D, which means that the high side PWM_U on and low side PWM_Z of pattern 6 are on; the high side PWM_W on and low side PWM_X on of pattern 5 are on. (see Figure 25.9.3)

In order to avoid setting it to an invalid switch state, it is recommended that the user does not need to reset this register and just use the initial setting value.

| SFR | Description | | |
|---|---|---|---|
| IPD_PD | Initial Position Detection Pattern Define Register | | |
| | Parameters | Description | Reset Value |
| SFR_PAGE = 0 | IPDPAT21_DEF | IPD Pattern 2、1 Define | 0xEBH |
| SFR_PAGE = 1 | IPDPAT43_DEF | IPD Pattern 4、3 Define | 0x96H |
| SFR_PAGE = 2 | IPDPAT65_DEF | IPD Pattern 6、5 Define | 0x7DH |

| IPD_PD | Address = A4H | | Reset Value = 0x00H | | | | | |
|---|---|---|---|---|---|---|---|---|
| | IPD_PD [7:0] | | | | | | | |
| | 7 | 6 | 5 | 4 | 3 | 2 | 1 | 0 |
| Type | W | W | W | W | W | W | W | W |

| | | | | |
|---|---|---|---|---|
| SFR_PAGE = 0 | Pattern2 High/Low Side on Define | | Pattern1 High/Low Side on Define | |
| SFR_PAGE = 1 | Pattern4 High/Low Side on Define | | Pattern3 High/Low Side on Define | |
| SFR_PAGE = 2 | Pattern6 High/Low Side on Define | | Pattern5 High/Low Side on Define | |
| | U、V、W<br><br>Bit[7:6] | X、Y、Z<br><br>Bit[5:4] | U、V、W<br><br>Bit[3:2] | X、Y、Z<br><br>Bit[1:0] |
| | 00 : --<br>01 : U<br>10 : V<br>11 : W | 00 : --<br>01 : X<br>10 : Y<br>11 : Z | 00 : --<br>01 : U<br>10 : V<br>11 : W | 00 : --<br>01 : X<br>10 : Y<br>11 : Z |

Table25.9.2 : IPD_PD SFR Description

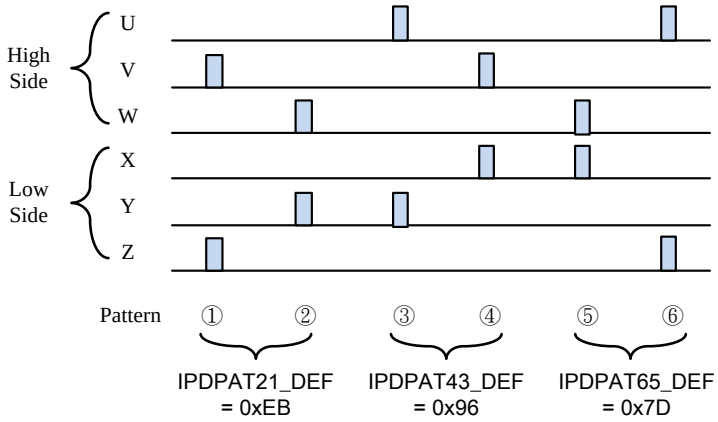


Figure 25.9.3 : IPD pattern high/low side on state initial setting

## 25.10 OCP ( Over Current Protection )

### 25.10.1 OCP Block Architecture

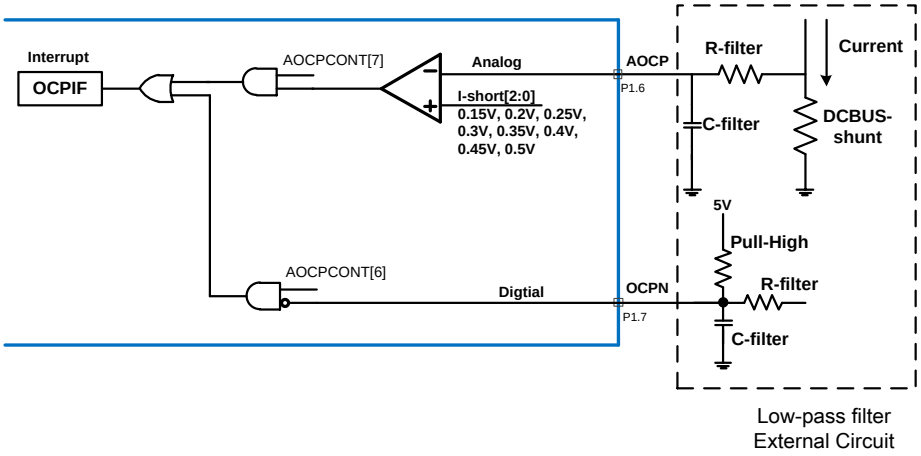


Figure 25.10.1 : Analog OCP and Digital OCPN Unit Architecture

### 25.10.2 OCP Block description and setting

CGF0X2AXX is embedded H/W Over Current Protection Circuit, supports Analog and Digital OCP two modes, when AOCPEN = 1 (see Table25.10.1), that is, set to Analog OCP, the built-in OCP comparator will be used to detect over current status, the voltage setting value of its comparator is I_ SHORT (see Table25.10.1), When the AOCP voltage value is greater than the I_ SHORT set voltage value, H/W will immediately force the PWM to 0 to protect the Power Device (MOS, IGBT..). DOCPEN = 1 (see Table25.10.1), turn on Digital OCP mode, Digital OCP is generally used when connected to the IPM module. The Fault PIN of the IPM is directly connected to the DOCP for OCP protection.

| AOCPCONT Analog OCP Control Register | Address = EEH | | | | | Reset Value = 0xE7H | | |
|---|---|---|---|---|---|---|---|---|
| Bit | DOCPNEN | AOCPEN | OPAPD | IPD | ----- | I_SHORT[3:0] | | |
| Bit | 7 | 6 | 5 | 4 | 3 | 2 | 1 | 0 |
| Type | R | R | R/W | R/W | R/W | R/W | R/W | R/W |

| | |
|---|---|
| DOCPNEN<br>[7] | Digital OCPN enable:<br>0 : Disable<br>1 : Enable |
| AOCPEN<br>[6] | Analog OCP enable:<br>0 : Disable<br>1 : Enable |
| OPAPD<br>[5] | OPA Power Down<br>0 : Normal<br>1 : OPA Power Down |
| IPD<br>[4] | IPD (Initial Position Detect) Path Select<br>0 : IPD Current Compare from AOCP Path<br>1 : IPD Current Compare from OPA Path |

| | | |
|---|---|---|
| I_ SHORT | Analog OCP SHORT level select : (OCP interrupt :OCPIF) | |
| [2:0] | 000 : 0.15V | 100 : 0.35V |
| | 001 : 0.2V | 101 : 0.4V |
| | 010 : 0.25V | 110 : 0.45V |
| | 011 : 0.3V | 111 : 0.5V(default) |

Table25.10.1 : AOCPCONT SFR Description

The MCU may read the OCPST (see Table25.10.2) to observe the over current status of the system. When OCPST =1, the system is in the over current state.

Analog OCP can set digital de-bounce time to avoid OCP malfunction caused by noise. By setting AOCPDBT (see Table25.10.2), Analog OCP 0~1.291uS de-bounce time can be set.

There are 2 modes to release OCP status, Auto Mode and User Mode. For its setting and action, please refer to Figure 25.10.2: OCP Short occur and PWM out.

DOCPCONT Address = EFH Reset Value = 0x05H

Digital OCP Control Register

| Bit | OCPST | AOCPDBT[4:0] | | | | | OCPC | OCPMS |
|---|---|---|---|---|---|---|---|---|
| Bit | 7 | 6 | 5 | 4 | 3 | 2 | 1 | 0 |
| Type | R | R/W | R/W | R/W | R/W | R/W | R/W | R/W |

| | |
|---|---|
| OCPST<br>[7] | OCP Short status :<br>0 : No Over current Short.<br>1 : Over current Short occur. (hardware set OCPC = ‘0’)<br>Six PWM output is high-impedance. |
| AOCPDBT<br>[6:2] | Analog OCP input de-bounce time (default 41.67nS)<br>0~31 = 0~1.291uS (48MHz/2 fixed) |
| OCPC<br>[1] | OCP status clear bit :<br>When OCP is occur, hard ware will set OCPC = ‘0’.<br>In User mode, user can write ‘1’ to clear OCP status, the PWM will output at next PWM cycle. |
| OCPMS<br>[0] | OCP mode select :<br>0 : Auto mode.<br>1: User mode. |

Table25.10.2 : DOCPCONT SFR Description

## 25.11 GEN_LPF (General Low-Pass Filter )

### 25.11.1 LPF Block Architecture

A simple first order digital low-pass filter is a filter that passes signals with a frequency lower than a selected cutoff frequency and attenuates signals with frequencies higher than the cutoff frequency (Figure 25.11.1).

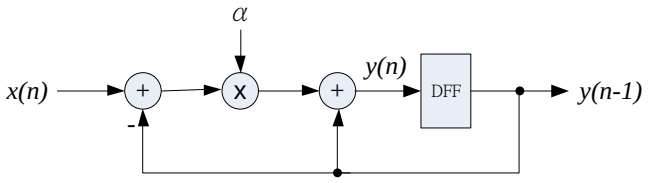


$$\alpha = \frac{\omega_c T_s}{1 + \omega_c T_s}$$

$\omega_c$ : cutoff angular frequency of filter
$T_s$ : sampling preiod

Figure 25.11.1 : first order digital low-pass filter Architecture

### 25.10.2 LPF Block description and setting

CGF0X2AXX built-in a simple first order digital low-pass filter, its architecture is shown in Figure 25.11.2, and the corresponding SFR is shown in Table 25.11.1. When using LPF, you must first fill in the parameters into the corresponding SFR and then issue an operation request (GEN_LPF_ACT, see Table 25.11.2) to the LPF. Then an LPF operation can be performed.

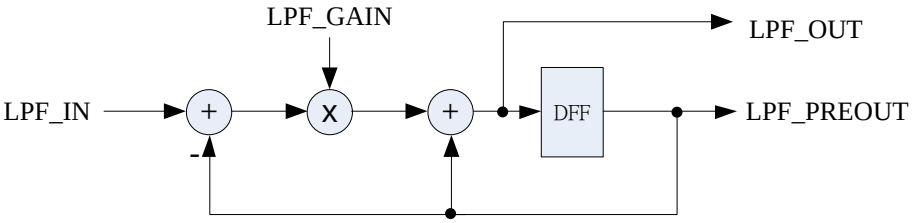


Figure 25.11.2 : LPF architecture and corresponding parameters

| SFR | Description | | | | | | | |
|---|---|---|---|---|---|---|---|---|
| GEN_LPF | General Low Pass Filter Parameter | | | | | | | |
| | Parameters | Description | | | | | | Reset Value |
| SFR_PAGE = 0 | GEN_GAIN | General LPF Gain parameter | | | | | | 0x0000H |
| SFR_PAGE = 1 | LPF_IN | General LPF input data | | | | | | 0x0000H |
| SFR_PAGE = 2 | LPF_OUT | General LPF output data | | | | | | 0x0000H |
| SFR_PAGE = 3 | LPF_PREOUT | General LPF last output data | | | | | | 0x0000H |
| | | | | | | | | |
| GEN_LPF_L | Address = A1H | Reset Value = 0x00H | | | | | | |
| General Low Pass Filter Parameter Low Byte | | | | | | | | |
| Bit | GEN_LPF[7:0] | | | | | | | |
| Type | 7 | 6 | 5 | 4 | 3 | 2 | 1 | 0 |
| | R/W | R/W | R/W | R/W | R/W | R/W | R/W | R/W |
| | | | | | | | | |
| GEN_LPF_H | Address = A2H | Reset Value = 0x00H | | | | | | |
| General Low Pass Filter Parameter High Byte | | | | | | | | |
| Bit | GEN_LPF[15:8] | | | | | | | |
| Type | 7 | 6 | 5 | 4 | 3 | 2 | 1 | 0 |
| | R/W | R/W | R/W | R/W | R/W | R/W | R/W | R/W |
| | | | | | | | | |

Table25.11.1 : LPF SFR Description

| MOTOR_CONT1 Motor Control Register 1 | | | Address = BFH | | | Reset Value = 0x00H | | |
|---|---|---|---|---|---|---|---|---|
| Bit | ----- | MPWM DUSEL | MPWM EN | IQIN SEL | FOC ANGSEL | USER_ PI_ACT | GEN_LPF_ACT 2 | SPFB FILTER |
| Type | | | | | | | R/W | |

| | |
|---|---|
| GEN_LPF_ACT | General Low Pass Filter active<br>1 : LPF Active, Clear by Hardware |

Table25.11.2 : GEN_LPF_ACT Control Bit

## 25.12 FG (Frequency Generator Control )

Frequency Generator (FG) is an output signal that indicates the rotation speed of rotor. The system can observe the FG signal to know the current motor speed.

### 25.12.1 FG Control

CGF0X2AXX has a built-in Frequency Generator H/W. To use FG, you must first enable FG. The number of pulses output during the electrical rotation period of a rotor can be set by FGCTRL (Figure 25.12.1). The output waveform of FG is as follows As shown in Figure 25.12.1.

FGCTRL Address = 1025H Reset Value = 0x00H

FG Control Register

| | | | | | | | | |
|---|---|---|---|---|---|---|---|---|
| | FG_EN | --- | --- | --- | --- | FGPULSE_SEL | | |
| Bit | 7 | 6 | 5 | 4 | 3 | 2 | 1 | 0 |
| Type | R | R | R/W | R/W | R/W | R/W | R/W | R/W |

| | |
|---|---|
| FG_EN | FG output enable: |
| [7] | 0 : Disable |
| | 1 : Enable |
| FGPULSE_SEL | FG pulse number selection: |
| [2:0] | 000 : 1 pulses/cycle |
| | 001 : 2 pulses/cycle |
| | 010 : 4 pulses/cycle |
| | 011 : 8 pulses/cycle |
| | 100 : 12 pulses/cycle |

Table 25.12.1 :FG Control SFR

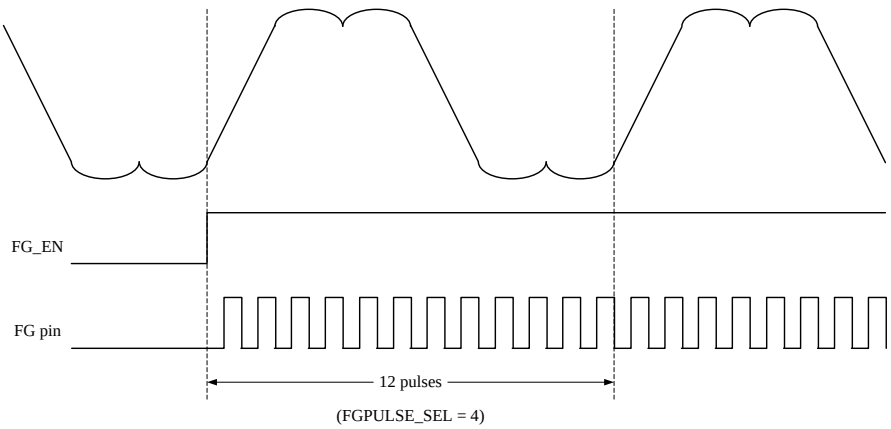


Figure 25.12.1 :FG Output Waveform

## 25.13 MDE SFR List

### 25.13.1 MOTOR_CONT1 SFR

MOTOR_CONT1 Address = BFH Reset Value = 0x00H
Motor Control Register 1

| | | | | | | | | |
|---|---|---|---|---|---|---|---|---|
| | --- | MPWMDUSEL | MPWMEN | IQINSEL | FOCANGSEL | USER_PI_ACT | GEN_LPF_ACT | SPFB |
| Bit | 7 | 6 | 5 | 4 | 3 | 2 | 1 | 0 |
| Type | x | R/W | R/W | R/W | R/W | R/W | R/W | R/W |

| | |
|---|---|
| MPWMDUSEL<br>[6] | MPWM duty select :<br>0 : From PWM_DUTY_A /B /C ( MPWMDAT, SFR Address = E1H/E2H )<br>1 : From SVPWM H/W |
| MPWMEN<br>[5] | MPWM timer run control enable:<br>0 : Disable<br>1 : Enable<br>MPWMEN =1, ADC CH1 & CH2 Auto Converter: |
| IQINSEL<br>[4] | IQ current loop PI Control input select<br>0 : From IQ_PI_CMD SFR ( SFR_PAGE = 0 & SFR Address = A6/A7 H )<br>1 : From Speed control loop output ( speed PI- control output ) |
| FOCANGSEL<br>[3] | FOC input angle select:<br>0 : From CPU_ANG (Write value of CPU_ANG_H & CPU_ANG_L)<br>1 : From SMO_ANG (Estimated angle)<br>Inverse park trans formation input select of angle |
| USER_PI_ACT<br>[2] | User PI active<br>0 : disable user PI<br>1 : active user PI |
| GEN_LPF_ACT<br>[1] | General Low Pass Filter active<br>1 : LPF Active, Clear by Hardware |
| SPFB_FILETER<br>[0] | Speed PI Feedback Filter enable:<br>0 : Disable Filter<br>1 : Enable Filter |

### 25.13.2 MOTOR_CONT2 SRF

MOTOR_CONT2 Address = 9FH Reset Value = 0xA4H
Motor Control Register 2

| | | | | | | | | |
|---|---|---|---|---|---|---|---|---|
| | DUTY_SUPRS_EN | DUTY_SUPRS | | SVPWMMODE | SVPWMPS | ---- | IAESOFEN | ---- |
| Bit | 7 | 6 | 5 | 4 | 3 | 2 | 1 | 0 |
| Type | R/W | R/W | R/W | R/W | R/W | X | R/W | X |

| | |
|---|---|
| DUTY_SUPRS_EN<br>[7] | Duty suppression enable:<br>0 : Duty suppression disable<br>1 : Duty suppression enable. |
| DUTY_SUPRS<br>[6:5] | Duty suppression select: (when DUTY_SUPRS_EN = 1)<br>00 : No Minimum Duty Limit.<br>01 : Full amplitude suppression |

| | |
|---|---|
| | 11 : Lowest duty limit in 2xDeadband. |
| SVPWMMODE<br>[4] | SVPWM mode select:<br>0 : 7-Segment SVPWM mode.<br>1 : 5-Segment SVPWM mode. |
| SVPWMPS<br>[3] | SVPWM output phase sequence:<br>0 : Positive sequence (A、B、C)<br>1 : Negative sequence (B、A、C) |
| IAESOFEN<br>[1] | Initial Angle estimation soft start enable:<br>0 : Disable<br>1 : Enable |

### 25.13.3 Field Oriented Control SFR

FOCCONT Address = D6H Reset Value = 0x00H

Field Oriented Control Register

| Bit | PI CLEAR | ESTCR | | | INV ADCD | ADC TRIG | PLL EN | SPEED EN |
|---|---|---|---|---|---|---|---|---|
| | 7 | 6 | 5 | 4 | 3 | 2 | 1 | 0 |
| Type | R/W | R/W | R/W | R/W | R/W | R/W | R/W | R/W |

| | |
|---|---|
| PICLEAR<br>[7] | Clear register value of PI-Control:<br>0: Disable<br>1: Enable |
| ESTCR<br>[6:4] | Iα and Iβ current ratio ( to SMO Rotor Position Estimation block )<br>000 : Current ValueX1 100 : Current Value/2<br>001 : Current ValueX2 101 : Current Value/4<br>010 : Current ValueX4 110 : Current Value/8<br>011 : Current ValueX8 111 : Current Value/16 |
| INVADCD<br>[3] | Inverse ADC register data:<br>0: Disable<br>1: Enable |
| ADCTRIG<br>[2] | ADC Trigger (Phase A and Phase B):<br>0 : PWM counter max<br>1 : PWM counter min |
| PLLEN<br>[1] | PLL PI Control enable:<br>0: Disable<br>1: Enable |
| SPEEDEN<br>[0] | SPEED PI Control enable:<br>0: Disable<br>1: Enable |

### 25.13.4 PI_GAIN SFR (PI- Controller GAIN)

PI_GAIN Address = E6H Reset Value = 0xF7H

PI KPx16 Gain Select Register

| | | | | | | | | |
|---|---|---|---|---|---|---|---|---|
| | IQKPGEN | --- | IDKPGEN | --- | SPKPGEN | --- | PLLKPEN | --- |
| Bit | 7 | 6 | 5 | 4 | 3 | 2 | 1 | 0 |
| Type | R/W | --- | R/W | --- | R/W | --- | R/W | --- |

| | |
|---|---|
| IQKPGEN<br>[7] | IQ KP Gain enable:<br>0: Disable<br>1: Enable |
| IDKPGEN<br>[5] | ID KP Gain enable:<br>0: Disable<br>1: Enable |
| SPKPGEN<br>[3] | SPEED KP Gain enable:<br>0: Disable<br>1: Enable |
| PLLKPGEN<br>[1] | PLL KP Gain enable:<br>0: Disable<br>1: Enable |

### 25.13.5 PI_TMSR SFR (PI Tracking Mode Select Register)

PI_TMSR Address = D7H Reset Value = 0x00H

PI Tracking Mode Select Register

| | IQ_TM SEL | IQ_TM EN | ID_TM SEL | ID_TM EN | SP_TM SEL | SP_TM EN | PLL_TM SEL | PLL_TM EN |
|---|---|---|---|---|---|---|---|---|
| Bit | 7 | 6 | 5 | 4 | 3 | 2 | 1 | 0 |
| Type | R/W | R/W | R/W | R/W | R/W | R/W | R/W | R/W |

| | |
|---|---|
| IQ_TMSEL<br>[7] | IQ-Tracking Mode Select:<br>0: Auto Mode<br>1: Manual Mode |
| IQ_TMEN<br>[6] | IQ-Tracking Mode Enable:<br>0: Disable<br>1: Enable |
| ID_TMSEL<br>[5] | ID-Tracking Mode Select:<br>0: Auto Mode<br>1: Manual Mode |
| ID_TMEN<br>[4] | ID-Tracking Mode Enable:<br>0: Disable<br>1: Enable |
| SP_TMSEL<br>[3] | SPEED-Tracking Mode Select:<br>0: Auto Mode<br>1: Manual Mode |
| SP_TMEN<br>[2] | SPEED -Tracking Mode Enable:<br>0: Disable<br>1: Enable |
| PLL_TMSEL<br>[1] | PLL-Tracking Mode Select:<br>0: Auto Mode<br>1: Manual Mode |
| PLL_TMEN<br>[0] | PLL-Tracking Mode Enable:<br>0: Disable<br>1: Enable |

### 25.13.6 SP_CYC SFR

SP_CYC Address = EDH Reset Value = 0x26H

SPEED Loop control cycle

| | SP-CYC[7:0] | | | | | | | |
|---|---|---|---|---|---|---|---|---|
| Bit | 7 | 6 | 5 | 4 | 3 | 2 | 1 | 0 |
| Type | W | W | W | W | W | W | W | W |

### 25.13.7 PI-Control Data SFR

| SFR | Description | | Address |
|---|---|---|---|
| PI_KI_L | PI-Control KI Parameter Low byte | | 91H |
| PI_KI_H | PI-Control KI Parameter High byte | | 92H |
| SFR_PAGE | Parameters | Description | Reset Value |
| SFR_PAGE = 0 | IQ_KI | Parameters KI for IQ - Control | 0x0000H |
| SFR_PAGE = 1 | ID_KI | Parameters KI for ID - Control | 0x0000H |
| SFR_PAGE = 2 | SPEED_KI | Parameters KI for SPEED - Control | 0x0000H |
| SFR_PAGE = 3 | PLL_KI | Parameters KI for PLL - Control | 0x09C4H |
| SFR_PAGE = 4 | USER_KI | Parameters KI for USER - Control | 0x0000H |

| SFR | Description | | Address |
|---|---|---|---|
| PI_KP_L | PI-Control KP Parameter Low byte | | 93H |
| PI_KP_H | PI-Control KP Parameter High byte | | 94H |
| SFR_PAGE | Parameters | Description | Reset Value |
| SFR_PAGE = 0 | IQ_KP | Parameters KP for IQ - Control | 0x0000H |
| SFR_PAGE = 1 | ID_KP | Parameters KP for ID - Control | 0x0000H |
| SFR_PAGE = 2 | SPEED_KP | Parameters KP for SPEED - Control | 0x0000H |
| SFR_PAGE = 3 | PLL_KP | Parameters KP for PLL - Control | 0x36B0H |
| SFR_PAGE = 4 | USER_KP | Parameters KP for USER - Control | 0x0000H |

| SFR | Description | | Address |
|---|---|---|---|
| PI_MAX_LMT_L | PI-Control Maximum Limit Data Low byte | | 95H |
| PI_MAX_LMT_H | PI-Control Maximum Limit Data High byte | | 96H |
| | Parameters | Description | Reset Value |
| SFR_PAGE = 0 | IQ_MAX | Maximum Limit value of IQ - Control | 0x7FFFH |
| SFR_PAGE = 1 | ID_MAX | Maximum Limit value of ID - Control | 0x7FFFH |
| SFR_PAGE = 2 | SPEED_MAX | Maximum Limit value of SPEED - Control | 0x7FFFH |
| SFR_PAGE = 3 | PLL_MAX | Maximum Limit value of PLL - Control | 0x7FFFH |
| SFR_PAGE = 4 | USER_MAX | Maximum Limit value of USER - Control | 0x0000H |

| SFR | Description | | Address |
|---|---|---|---|
| PI_MIN_LMT_L | PI-Control Minimum Limit Data Low byte | | B2H |
| PI_MIN_LMT_H | PI-Control Minimum Limit Data High byte | | B3H |
| | Parameters | Description | Reset Value |
| SFR_PAGE = 0 | IQ_MIN | Minimum Limit value of IQ - Control | 0x8001H |
| SFR_PAGE = 1 | ID_MIN | Minimum Limit value of ID - Control | 0x8001H |
| SFR_PAGE = 2 | SPEED_MIN | Minimum Limit value of SPEED - Control | 0x8001H |
| SFR_PAGE = 3 | PLL_MIN | Minimum Limit value of PLL - Control | 0x8001H |
| SFR_PAGE = 4 | USER_MIN | Minimum Limit value of USER - Control | 0x0000H |

| SFR | Description | | Address |
|---|---|---|---|
| PI_CMD_L | PI-Control Command Data Low byte | | A6H |
| PI_CMD_H | PI-Control Command Data High byte | | A7H |
| | Parameters | Description | Reset Value |
| SFR_PAGE = 0 | IQ_CMD | Command value of IQ - Control | 0x0000H |
| SFR_PAGE = 1 | ID_CMD | Command value of ID - Control | 0x0000H |
| SFR_PAGE = 2 | SPEED_CMD | Command value of SPEED - Control | 0x0000H |
| SFR_PAGE = 3 | PLL_CMD | Command value of PLL - Control | 0x0000H |
| SFR_PAGE = 4 | USER_CMD | Command value of USER - Control | 0x0000H |

| SFR | Description | | Address |
|---|---|---|---|
| PI_UI_L | PI-Control Integral Data Low byte | | 9DH |
| PI_UI_H | PI-Control Integral Data High byte | | 9EH |
| | Parameters | Description | Reset Value |
| SFR_PAGE = 0 | IQ_UI | Integral value of IQ - Control | 0x0000H |
| SFR_PAGE = 1 | ID_UI | Integral value of ID - Control | 0x0000H |
| SFR_PAGE = 2 | SPEED_UI | Integral value of SPEED - Control | 0x0000H |
| SFR_PAGE = 3 | PLL_UI | Integral value of PLL - Control | 0x0000H |
| SFR_PAGE = 4 | USER_UI | Integral value of USER - Control | 0x0000H |

| SFR | Description | | Address |
|---|---|---|---|
| PI_OUT_L | PI-Control Output Data Low byte | | ACH |
| PI_OUT_H | PI-Control Output Data High byte | | ADH |
| | Parameters | Description | Reset Value |

| | | | |
|---|---|---|---|
| SFR_PAGE = 0 | IQ_OUT | Output Data of IQ - Control | 0x0000H |
| SFR_PAGE = 1 | ID_OUT | Output Data of ID - Control | 0x0000H |
| SFR_PAGE = 2 | SPEED_OUT | Output Data of SPEED - Control | 0x0000H |
| SFR_PAGE = 3 | PLL_OUT | Output Data of PLL - Control | 0x0000H |
| SFR_PAGE = 4 | USER_OUT | Output Data of USER - Control | 0x0000H |

| SFR | Description | | Address |
|---|---|---|---|
| PI_FB_L | PI-Control Feedback Data Low byte | | AEH |
| PI_FB_H | PI-Control Feedback Data High byte | | AFH |
| | Parameters | Description | Reset Value |
| SFR_PAGE = 0 | IQ_FB | Feedback Data of IQ - Control | 0x0000H |
| SFR_PAGE = 1 | ID_FB | Feedback Data of ID - Control | 0x0000H |
| SFR_PAGE = 2 | SPEED_FB | Feedback Data of SPEED - Control | 0x0000H |
| SFR_PAGE = 3 | PLL_FB | Feedback Data of PLL - Control | 0x0000H |
| SFR_PAGE = 4 | USER_FB | Feedback Data of USER - Control | 0x0000H |

| SFR | Description | | Address |
|---|---|---|---|
| PI_KT_L | PI-Control KT Parameter Low byte | | DEH |
| PI_KT_H | PI-Control KT Parameter High byte | | DFH |
| SFR_PAGE | Parameters | Description | Reset Value |
| SFR_PAGE = 0 | IQ_KT | Parameters KT for IQ - Control | 0x0000H |
| SFR_PAGE = 1 | ID_KT | Parameters KT for ID - Control | 0x0000H |
| SFR_PAGE = 2 | SPEED_KT | Parameters KT for SPEED - Control | 0x0000H |
| SFR_PAGE = 3 | PLL_KT | Parameters KT for PLL - Control | 0x0000H |

| SFR | Description | | Address |
|---|---|---|---|
| PI_TR_L | PI-Control TR Parameter Low byte | | AAH |
| PI_TR_H | PI-Control TR Parameter High byte | | ABH |
| SFR_PAGE | Parameters | Description | Reset Value |
| SFR_PAGE = 0 | IQ_TR | Parameters TR for IQ - Control | 0x0000H |
| SFR_PAGE = 1 | ID_TR | Parameters TR for ID - Control | 0x0000H |
| SFR_PAGE = 2 | SPEED_TR | Parameters TR for SPEED - Control | 0x0000H |
| SFR_PAGE = 3 | PLL_TR | Parameters TR for PLL - Control | 0x0000H |

### 25.13.8 Sliding Mode Observer Data SFR

| SFR | Description | | Address |
|---|---|---|---|
| SMO_D1_L | Field Oriented Control Data1 Low byte | | BBH |
| SMO_D1_H | Field Oriented Control Data1 High byte | | BCH |
| | Parameters | Description | |
| SFR_PAGE = 0 | $G_S$ | Parameters GS for motor model | 0x7FFFH |
| SFR_PAGE = 1 | Kslide | Parameters Slide mode Gain for angle estimation | 0x3E80H |
| SFR_PAGE = 2 | SMO_ANGBAS | Parameters Angle Base for angle estimation | 0x0B2FH |
| SFR_PAGE = 3 | Z_correction | SMO Zgain correction: $Z_{gain(new)} = \frac{Z_{gain} \times Z_correction}{32767}$ | 0x7FFFH |
| SFR_PAGE = 4 | SMO_ANG | Estimated value of SMO angle | Read-Only |
| SFR_PAGE = 5 | BBGain | Parameters Slide mode Bang Bang Control Gain for angle estimation | 0x7FFFH |

| SFR | Description | | Address |
|---|---|---|---|
| SMO_D2_L | Field Oriented Control Data1 Low byte | | BDH |
| SMO_D2_H | Field Oriented Control Data1 High byte | | BEH |
| | Parameters | Description | |
| SFR_PAGE = 0 | $F_S$ | Parameters FS for motor model. | 0x7FFFH |
| SFR_PAGE = 1 | Kslf | Parameters LPF for BEMF $e_s$ estimation | 0x0064H |
| SFR_PAGE = 3 | MaxSMCError | MAXSMC Error for SMC in Linear Region | 0x7FFFH |
| SFR_PAGE = 4 | EST-SP | ω* (Output value of PLL-PI-Control) | Read-Only |

### 25.13.9 Field Oriented Controller Data SFR

| SFR | Description | | Address |
|---|---|---|---|
| FOC_D_L | Field Oriented Control Data Low byte | | D4H |
| FOC_D_H | Field Oriented Control Data High byte | | D5H |
| | Parameters | Description | Reset Value |
| SFR_PAGE = 0 | VQ_OFFSET | q-axis voltage offset | 0x0000H |
| SFR_PAGE = 1 | VD_OFFSET | d-axis voltage offset | 0x0000H |
| SFR_PAGE = 3 | AS | Angle Supplement Data | 0x0000H |
| SFR_PAGE = 4 | CPU_ANG | CPU Angle Data Register | 0x0000H |
| SFR_PAGE = 5 | FOC_ANG | Park and Inverse Park transformation angle input<br>※ **Read: Theta for FOC angle.**<br>**Write: Theta offset.** | 0x0000H |
| SFR_PAGE = 6 | SVPWM_Amp | Amplitude value of SVPWM transformation | 0x4000H |

### 25.13.10 MPWMCONT1 SFR

MPWMCONT1(SYNC) Address = E3H Reset Value = 0x00H
MPWM Control Register

| Bit | ----- | HALF SWAP | ALL SWAP | UWXZ SWAP | PWMX_MOD | | PWMU_MOD | |
|---|---|---|---|---|---|---|---|---|
| | 7 | 6 | 5 | 4 | 3 | 2 | 1 | 0 |
| Type | X | R/W | R/W | R/W | R/W | R/W | R/W | R/W |

| | |
|---|---|
| HALFSWAP [6] | Half pin swap (X,V swap),(Y,W swap) and (X,W swap)<br>0: Normal<br>1: Half change |
| ALLSWAP [5] | High side and Low side pin swap(U->X , X->U、V->Y,Y->V、W->X,X->W)<br>0: Normal<br>1: Inverse |
| UWXZSWAP [4] | U、W pin swap and X、Z pin swap<br>0: Normal<br>1: Swap |
| PWMX_MOD [3:2] | Phase U Low-side (X) output mode select :<br>00: Force Low 10: Active High<br>01: Force High 11: Active Low |
| PWMU_MOD [1:0] | Phase U High-side (U) output mode select :<br>00: Force Low 10: Active High<br>01: Force High 11: Active Low |

### 25.13.11 MPWMCONT2 SFR

MPWMCONT2(SYNC) Address = E7H Reset Value = 0x00H
MPWM Control Register

| Bit | PWMZ_MOD | | PWMW_MOD | | PWMY_MOD | | PWMV_MOD | |
|---|---|---|---|---|---|---|---|---|
| | 7 | 6 | 5 | 4 | 3 | 2 | 1 | 0 |
| Type | R/W | R/W | R/W | R/W | R/W | R/W | R/W | R/W |

| | |
|---|---|
| PWMZ_MOD [7:6] | Phase W Low-side (Z) output mode select :<br>00: Force Low 10: Active High<br>01: Force High 11: Active Low |
| PWMW_MOD [5:4] | Phase W High-side (W) output mode select :<br>00: Force Low 10: Active High<br>01: Force High 11: Active Low |
| PWMY_MOD [3:2] | Phase V Low-side (Y) output mode select :<br>00: Force Low 10: Active High<br>01: Force High 11: Active Low |
| PWMV_MOD [1:0] | Phase V High-side (V) output mode select :<br>00: Force Low 10: Active High<br>01: Force High 11: Active Low |

### 25.13.12 MPWMDT SFR

| MPWMDT (SYNC) | Address = E5H | Reset Value = 0x78H |
|---|---|---|

Motor PWM Dead-Time Register

| Bit | MPWMDT[7:0] | | | | | | | |
|---|---|---|---|---|---|---|---|---|
| | 7 | 6 | 5 | 4 | 3 | 2 | 1 | 0 |
| Type | R/W | R/W | R/W | R/W | R/W | R/W | R/W | R/W |

### 25.13.13 MPWMINV SFR

| MPWMINV (SYNC) | Address = E4H | Reset Value = 0x00H |
|---|---|---|

MPWM Inverse Selection Register

| Bit | ----- | ----- | ZINV | WINV | YINV | VINV | XINV | UINV |
|---|---|---|---|---|---|---|---|---|
| | 7 | 6 | 5 | 4 | 3 | 2 | 1 | 0 |
| Type | X | X | R/W | R/W | R/W | R/W | R/W | R/W |

| | |
|---|---|
| ZINV<br>[5] | Low-side PWM Z output inverse select :<br>0 : Non-inverse<br>1 : Inverse |
| WINV<br>[4] | High-side PWM W output inverse select :<br>0 : Non-inverse<br>1 : Inverse |
| YINV<br>[3] | Low-side PWM Y output inverse select :<br>0 : Non-inverse<br>1 : Inverse |
| VINV<br>[2] | High-side PWM V output inverse select :<br>0 : Non-inverse<br>1 : Inverse |
| XINV<br>[1] | Low-side PWM X output inverse select :<br>0 : Non-inverse<br>1 : Inverse |
| UINV<br>[0] | High-side PWM U output inverse select :<br>0 : Non-inverse<br>1 : Inverse |

### 25.13.14 MPWM DATA SFR

| SFR | Description | | Address |
|---|---|---|---|
| MPWMDATL | MPWM Data Low Byte(SYNC) | | E2H |
| MPWMDATH | MPWM Data High Byte(SYNC) | | E1H |
| | Parameters | Description | Reset Value |
| SFR_PAGE = 0 | MPWM Cycle | Motor PWM cycle value | 0x04B0H |
| SFR_PAGE = 1 | Phase A | Motor PWM Duty value for Phase A | 0x0258H |
| SFR_PAGE = 2 | Phase B | Motor PWM Duty value for Phase B | 0x0258H |
| SFR_PAGE = 3 | Phase C | Motor PWM Duty value for Phase C | 0x0258H |

### 25.13.15 Analog OCP Control SFR

AOCPCONT Address = EEH Reset Value = 0xE7H

Analog OCP Control Register

| Bit | DOCPNEN | AOCPEN | OPAPD | IPD | ----- | I_SHORT[3:0] | | |
|---|---|---|---|---|---|---|---|---|
| Bit | 7 | 6 | 5 | 4 | 3 | 2 | 1 | 0 |
| Type | R | R | R/W | R/W | R/W | R/W | R/W | R/W |

| | |
|---|---|
| DOCPNEN<br>[7] | Digital OCPN enable:<br>0 : Disable<br>1 : Enable |
| AOCPEN<br>[6] | Analog OCP enable:<br>0 : Disable<br>1 : Enable |
| OPAPD<br>[5] | OPA Power Down<br>0 : Normal<br>1 : OPA Power Down |
| IPD<br>[4] | IPD (Initial Position Detect) Path Select<br>0 : IPD Current Compare from AOCP Path<br>1 : IPD Current Compare from OPA Path |
| I_ SHORT<br>[2:0] | Analog OCP SHORT level select : (OCP interrupt :OCPIF)<br>000 : 0.15V 100 : 0.35V<br>001 : 0.2V 101 : 0.4V<br>010 : 0.25V 110 : 0.45V<br>011 : 0.3V 111 : 0.5V(default) |

### 25.13.16 DOCPN Control SFR

DOCPCONT Address = EFH Reset Value = 0x05H

Digital OCP Control Register

| Bit | OCPST | AOCPDBT[4:0] | | | | | OCPC | OCPMS |
|---|---|---|---|---|---|---|---|---|
| Bit | 7 | 6 | 5 | 4 | 3 | 2 | 1 | 0 |
| Type | R | R/W | R/W | R/W | R/W | R/W | R/W | R/W |

| | |
|---|---|
| OCPST<br>[7] | OCP Short status :<br>0 : No Over current Short.<br>1 : Over current Short occur. (hardware set OCPC = ‘0’)<br>Six PWM output is high-impedance. |
| AOCPDBT<br>[6:2] | Analog OCP input de-bounce time (default 41.67nS)<br>0~31 = 0~1.291uS (48MHz/2 fixed) |
| OCPC<br>[1] | OCP status clear bit :<br>When OCP is occur, hard ware will set OCPC = ‘0’.<br>In User mode, user can write ‘1’ to clear OCP status, the PWM will output at next PWM cycle. |
| OCPMS<br>[0] | OCP mode select :<br>0 : Auto mode.<br>1: User mode. |

### 25.13.17 IPD Control SFR

IPD_CTRL Address = A5H Reset Value = 0x18H

Initial Position Detection Control Register

| Bit | IPDS | IPDMIN | | | IPDPNS | IPDCYC | | IPDSTR |
|---|---|---|---|---|---|---|---|---|
| Bit | 7 | 6 | 5 | 4 | 3 | 2 | 1 | 0 |
| Type | R | R | R | R | R/W | R/W | R/W | R/W |

| | | |
|---|---|---|
| IPDS<br>[7] | IPD State:<br>0:Normal<br>1:Busy | |
| IPDMIN<br>[6:4] | IPD Minimum Pattern:<br>001: Pattern1<br>011: Pattern3<br>101: Pattern5 | <br>010: Pattern2<br>100: Pattern4<br>110: Pattern6 |
| IPDPNS<br>[3] | IPD Pattern Number Select:<br>0: 4 pattern<br>1: 6 pattern | |
| IPDPCYC<br>[2:1] | IPD Pattern Cycle:<br>00: 13ms (48MHz Count)<br>10: 54ms (12MHz Count) | <br>01: 27ms (24MHz Count)<br>11: 110ms (6MHz Count) |
| IPDSTR<br>[0] | IPD Start:<br>1: Start IPD | |

### 25.13.18 IPD Data SFR

| SFR | Description | | |
|---|---|---|---|
| IPD_PD | Initial Position Detection Pattern Define Register | | |
| | Parameters | Description | Reset Value |
| SFR_PAGE = 0 | IPDPAT21_DEF | IPD Pattern 2、1 Define | 0xEBH |
| SFR_PAGE = 1 | IPDPAT43_DEF | IPD Pattern 4、3 Define | 0x96H |
| SFR_PAGE = 2 | IPDPAT65_DEF | IPD Pattern 6、5 Define | 0x7DH |

| IPD_PD | Address = A4H | | Reset Value = 0x00H | | | | | |
|---|---|---|---|---|---|---|---|---|
| | IPD_PD [7:0] | | | | | | | |
| | 7 | 6 | 5 | 4 | 3 | 2 | 1 | 0 |
| Type | W | W | W | W | W | W | W | W |
| SFR_PAGE = 0 | Pattern2 High/Low Side on Define | | | | Pattern1 High/Low Side on Define | | | |
| SFR_PAGE = 1 | Pattern4 High/Low Side on Define | | | | Pattern3 High/Low Side on Define | | | |
| SFR_PAGE = 2 | Pattern6 High/Low Side on Define | | | | Pattern5 High/Low Side on Define | | | |
| | U、V、W<br>Bit[7:6] | | X、Y、Z<br>Bit[5:4] | | U、V、W<br>Bit[3:2] | | X、Y、Z<br>Bit[1:0] | |
| | 00 : --<br>01 : U<br>10 : V<br>11 : W | | 00 : --<br>01 : X<br>10 : Y<br>11 : Z | | 00 : --<br>01 : U<br>10 : V<br>11 : W | | 00 : --<br>01 : X<br>10 : Y<br>11 : Z | |

### 25.13.19 General Low Pass Filter SFR

| SFR | Description | | |
|---|---|---|---|
| GEN_LPF | General Low Pass Filter Parameter | | |
| | Parameters | Description | Reset Value |
| SFR_PAGE = 0 | GEN_GAIN | General LPF Gain parameter | 0x0000H |
| SFR_PAGE = 1 | LPF_IN | General LPF input data | 0x0000H |
| SFR_PAGE = 2 | LPF_OUT | General LPF output data | 0x0000H |
| SFR_PAGE = 3 | LPF_PREOUT | General LPF last output data | 0x0000H |

### 25.13.20 FG Control Register SFR

FGCTRL Address = 1025H Reset Value = 0x00H

FG Control Register

| | | | | | | | | |
|---|---|---|---|---|---|---|---|---|
| | FG_EN | --- | --- | --- | --- | FGPULSE_SEL | | |
| Bit | 7 | 6 | 5 | 4 | 3 | 2 | 1 | 0 |
| Type | R | R | R/W | R/W | R/W | R/W | R/W | R/W |

FG_EN FG output enable:

[7] 0 : Disable

1 : Enable

FGPULSE_SEL FG pulse number selection:

[2:0] 000 : 1 pulses/cycle

001 : 2 pulses/cycle

010 : 4 pulses/cycle

011 : 8 pulses/cycle

100 : 12 pulses/cycle

### 25.13.21 Coordinate Transformation Block Signals observe XSFR

| XSFR | Description | Address | Characteristic |
|---|---|---|---|
| IA_L | ADC Output of phase A current ( Ia ) Low Byte | 1060H | Read Only |
| IA_H | ADC Output of phase A current ( Ia ) High Byte | 1061H | Read Only |
| IALPHA_L | α-axis current (iα) Low Byte of CLARKE Transform | 1062H | Read Only |
| IALPHA_H | α-axis current (iα) High Byte of CLARKE Transform | 1063H | Read Only |
| IB_L | ADC Output of phase B current ( Ib ) Low Byte | 1058H | Read Only |
| IB_H | ADC Output of phase B current ( Ib ) High Byte | 1059H | Read Only |
| IBETA_L | β-axis current (iβ) Low Byte of CLARKE Transform | 105AH | Read Only |
| IBETA_H | β-axis current (iβ) High Byte of CLARKE Transform | 105BH | Read Only |

### 25.13.22 Inverse Coordinate Transformation Block Signals observe XSFR

| XSFR | Description | Address | Characteristic |
|---|---|---|---|
| VALPHA_L(Read) | α-axis Stator Voltage Data Register Low Byte | 1064H | Read Only |
| VALPHA_H(Read) | α-axis Stator Voltage Data Register High Byte | 1065H | Read Only |
| VA_L(Read) | Phase A Drive Voltage Data Register Low Byte | 1066H | Read Only |
| VA_H(Read) | Phase A Drive Voltage Data Register High Byte | 1067H | Read Only |
| VBETA_L(Read) | β-axis Stator Voltage Data Register Low Byte | 105CH | Read Only |
| VBETA_H(Read) | β-axis Stator Voltage Data Register High Byte | 105DH | Read Only |
| VB_L(Read) | Phase B Drive Voltage Data Register Low Byte | 105EH | Read Only |
| VB_H(Read) | Phase B Drive Voltage Data Register High Byte | 105FH | Read Only |

### 25.13.23 BEMF Estimation Signals observe XSFR

| XSFR | Description | Address | Characteristic |
|---|---|---|---|
| ZALPHA_L | The Z gain of EEMF Eα Data Register Low Byte | 1070H | Read Only |
| ZALPHA_H | The Z gain of EEMF Eα Data Register High Byte | 1071H | Read Only |
| ZBETA_L | The Z gain of EEMF Eβ Data Register Low Byte | 1068H | Read Only |
| ZBETA_H | The Z gain of EEMF Eβ Data Register High Byte | 1069H | Read Only |
| ES_IALPHA_L | Estimate Current Iα Data Register Low Byte | 1072H | Read Only |
| ES_IALPHA_H | Estimate Current Iα Data Register High Byte | 1073H | Read Only |
| ES_EALPHA_L | Estimate EEMF Eα Data Register Low Byte | 1074H | Read Only |
| ES_EALPHA_H | Estimate EEMF Eα Data Register High Byte | 1075H | Read Only |
| ES_IBETA_L | Estimate Current Iβ Data Register Low Byte | 106AH | Read Only |
| ES_IBETA_H | Estimate Current Iβ Data Register High Byte | 106BH | Read Only |
| ES_EBETA_L | Estimate EEMF Eβ Data Register Low Byte | 106CH | Read Only |
| ES_EBETA_H | Estimate EEMF Eβ Data Register High Byte | 106DH | Read Only |

## 26. SYNC

MDE behavior is synchronized with MPWM, many MDE SFRs have shadow register that is used to update these SFRs at the same time with SYNC register. Write SYNC any value will synchronization update these SFRs at the same time.

| SYNC | | | | Address = 8FH | | | Reset Value = 00000000B | |
|---|---|---|---|---|---|---|---|---|
| MDE Sync Register | | | | | | | | |
| Bit | SYNC[7:0] | | | | | | | |
| | 7 | 6 | 5 | 4 | 3 | 2 | 1 | 0 |
| Type | W | W | W | W | W | W | W | W |

Write only.

Shadow register: (need SYNC)
MPWMCONT1
MPWMCONT2
MPWMDT
MPWMINV
MPWMDATL
MPWMDATH
CPU_ANG_L
CPU_ANG_H
VDQ_OFFSET_L
VDQ_OFFSET_H
SVPWM_AMP

# 27. HV Gate-Driver Function Description

## 27.1 Low Side Power Supply (VCC15, SGND, PGND)

VCC15 is the low side supply and it provides power to both input logic and low side output power stage. In CGF082A, input logic is referenced to SGND as well as the under-voltage detection circuit. Output power stage is referenced to PGND. PGND ground is floating respect to SGND ground with a recommended range of operation of +/-5V, which guarantees enough margin of gate to source voltage, VGS, to driver power devices such as power MOSFET.

The built-in under-voltage lockout circuit enables the device to operate at sufficient power on when a typical VCC15 supply voltage higher than VCCUV+ =9.5 is present, shown as Figure 27.1.1. The IC shuts down all the gate drivers outputs, when the VCC15 supply voltage is below VCCUV- =8.8 V, shown as Figure 19.1.1. This prevents the external power devices from extremely low gate voltage levels during on-state and therefore from excessive power dissipation.

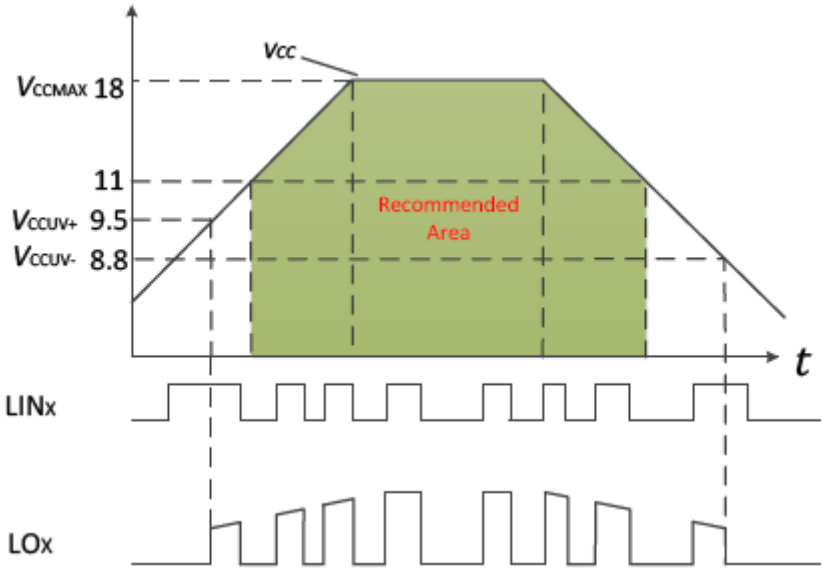


Figure 27.1.1 VCC15 supply UVLO operating area

## 27.2 High Side Power Supply (VBU-VSU, VBU-VSU, VBU-VSU )

VB to VS is the high side supply voltage. The totally high side circuitry can float with respect to SGND following the external high side power device emitter/source voltage. Due to the internally low power consumption, the whole high side circuitry can be supplied by bootstrap topology connected to VCC15, and it can be powered with small bootstrap capacitors.

The device operating area as a function of the supply voltage is given in Figure 27.2.1.

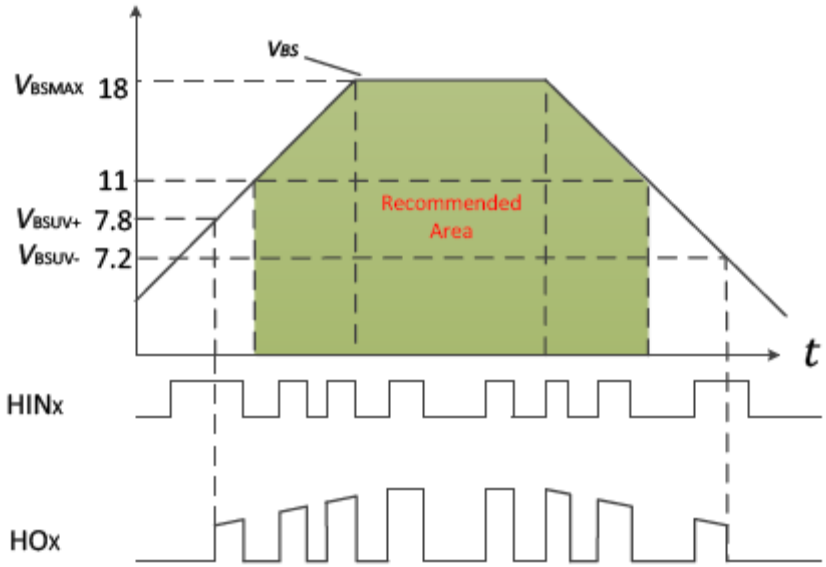


Figure 27.2.1VBS supply UVLO operating area

## 27.3 Low Side and High Control Input Logic (HU,V,W / LU,V,W)

The Schmitt trigger threshold of each input is designed enough low such to guarantee LSTTL and CMOS compatibility down to 3.3 V controller outputs. Input Schmitt trigger and advanced noise filter provide beneficial noise rejection to short input pulses. An internal pull-down resistor of about 200k (positive logic) pre-biases each input during VCC15 supply start-up state. It is anyway recommended for proper work of the driver not to provide input pulse-width lower than 400ns.

## 27.4 Dead-Time

The IC features integrated a fixed dead-time protection circuitry. The dead time feature inserts a time period (a minimum dead time) in which both the high- and low-side power switches are held off; this is done to ensure that the power switch being turned off has fully turned off before the second power switch is turned on. This minimum dead time is automatically inserted whenever the external dead time is shorter than DT; external dead times larger than DT are not modified by the gate driver. Figure 27.5.1 illustrates the dead time period and the relationship between the output gate signals.

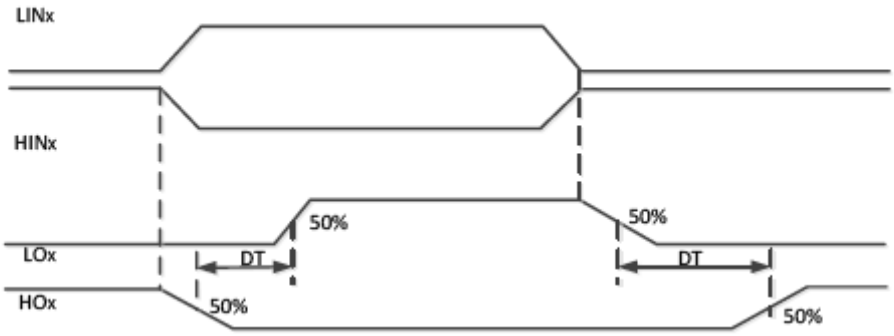


Figure 27.5.1 Dead Time

## 27.5 Gate Driver (HOU,V,W, LOU,V,W)

Low side and high side driver outputs are specifically designed for pulse operation and dedicated to drive the power devices such as IGBT and MOSFET. Low side outputs (i.e. LOU, V, W) are state triggered by the respective inputs, while high side outputs (i.e. HOU, V, W) are only changed at the edge of the respective inputs. In particular, after releasing from an under voltage condition of the VBS supply, a new turn-on signal (edge) is necessary to activate the respective high side output, while after releasing from a under voltage condition of the VCC15 supply, the low side outputs can directly switch to the state of their respective inputs and don’t suffer from the trouble as high side driver.

## 27.6 Absolute Maximum Ratings

Stresses exceeding the absolute maximum ratings may damage the device or make the function abnormal. All the voltage parameters are absolute voltages referenced to IC SGND unless otherwise stated in the table.

| Parameter | Symbol | Min. | Max. | Units |
|---|---|---|---|---|
| High-side floating supply voltage | VB.U.V.W | -0.3 | 600 | V |
| High-side offset voltage | VS.U.V.W | VB.U.V.W -18 | VB.U.V.W + 0.3 | |
| High-side gate driver output voltage | VHO.U.V.W | VS.U.V.W -0.3 | VS.U.V.W +0.3 | |
| Low-side gate driver output voltage | VLO.U.V.W | PGND-0.3 | VCC15+0.3 | |
| Logic input voltage | VH.U.V.W<br>VL.U.V.W | -0.3 | 20 | |
| Low-side supply voltage | VCC15 | -0.3 | 20 | |
| Logic gate driver return | PGND | VCC15-18 | VCC15+0.3 | |
| Allowable Offset Voltage Slew Rate | dV/dt | | 40 | V/ns |

## 27.7 Recommended Operating Conditions

| Parameter | Symbol | Min. | Max. | Units |
|---|---|---|---|---|
| Low-side supply voltage | VCC15 | 11 | 18 | V |
| High-side Floating Supply Offset Voltage(note1) | VS.U.V.W | VB. -18 | VB-11 | |
| High-side Floating Supply Voltage | VB.U.V.W | -8 | 600 | |
| High-side gate driver output voltage | VHO.U.V.W | VS | VB | |
| Low-side gate driver output voltage | VLO.U.V.W | PGND | VCC15 | |

Note1: For VBS=12V, normal Logic operation for VS of –8 V to 600 V. The parameter is only guaranteed by design.

## 27.8 Static Electrical Characteristics

（VCC15-SGND）=(VB-VS)=12V. TAMB=25℃unless otherwise specified. The VIN, VTH and IIN Parameters are reference to SGND and are applicable to all six channels. The VO and IO parameters are referenced to respective VS and PGND and are applicable to the respective output leads. The VCCUV parameters are referenced to SGND. The VBSUV parameters are referenced to VS.

| Parameter | Symbol | Test Conditions | Min. | Typ. | Max. | Unit |
|---|---|---|---|---|---|---|
| Low Side Power Supply Characteristics | | | | | | |
| VCC15 quiescent current in UVLO mode | IQVCC | VH.U.V.W =VL.U.V.W=0 or 5V | 200 | 350 | 500 | μA |
| VCC15 operating VCC15 supply current | IVCCOP | f L.U.V.W=20k, f H.U.V.W=20k, | - | 1200 | - | |
| VCC15 supply under-voltage positive going threshold | VCCUV+ | | 8 | 9 | 10 | V |
| VCC15 supply under-voltage negative going threshold | VCCUV- | | 8 | 8 | 10 | |
| VCC15supply under-voltage lockout hysteresis | VCCHYS | | - | 0.7 | - | |
| High Side Floating Power Supply Characteristics | | | | | | |
| High side VBS supply under-voltage positive going threshold | VBSUV+ | | 8 | 9 | 10 | V |
| High side VBS supply under-voltage negative going threshold | VBSUV- | | 7 | 8 | 9 | |
| High side VBS supply under-voltage lockout hysteresis | VBSUVHYS | | - | 0.6 | - | |
| High side VBS quiescent current in UVLO mode | IQBS | VBS=12V | 35 | 54 | 75 | μA |
| Offset supply leakage current | ILK | VB=VS=600V VCC15=0V | - | - | 1 | |
| Gate Driver Output Section | | | | | | |
| High Side Output High Short-Circuit Pulse Current | IHO+ | VHO=VB=12V *1 | - | 90 | - | mA |
| High Side Output Low Short-Circuit Pulse Current | IHO- | VHO=VS=0 *1 | - | 200 | - | |
| Low Side Output High Short-Circuit Pulse Current | ILO+ | VLO=VCC15=12V*1 | - | 90 | - | |
| Low Side Output Low Short-Circuit Pulse Current | ILO- | VLO=PGND=0 *1 | - | 200 | - | |
| Allowable Negative VS Pin Voltage for HU.V.W Signal Propagation to HOU.V.W | VSN | VBS=12V | - | -10 | - | V |

*1 : Tr=200ns, Tf=60ns, Cload=1nF

## 27.9 Dynamic Electrical Characteristics

（VCC15-SGND）=(VB-VS)=12V ,Vs.u.v.w=SGND=PGND, and C load=1nF unless otherwise specified, TAMB=25℃.

| Parameter | Symbol | Test Conditions | Min. | Typ. | Max. | Unit |
|---|---|---|---|---|---|---|
| Turn-On propagation delay | $t_{ON}$ | VH.U.V.W or VL.U.V.W=5V, VS.U.V.W=0 | 300 | 510 | 700 | ns |
| Turn-Off Propagation delay | $t_{OFF}$ | VH.U.V.W or VL.U.V.W=0, VS.U.V.W=0 | 300 | 570 | 700 | |
| Turn-On Rise time | $t_R$ | VH.U.V.W or VL.U.V.W=5V, VS.U.V.W=0 | - | 90 | - | |
| Turn-Off Fall time | $t_F$ | VH.U.V.W or VL.U.V.W=0, VS.U.V.W=0 | - | 40 | - | |
| Input Filtering Time | $t_{FLT,IN}$ | | | 400 | | |
| Dead Time | DT | | 150 | 230 | 310 | |
| Dead-Time Matching(All Six Channels) | MDT | | - | - | 100 | |
| Delay Matching(All Six Channels) | MT | | - | - | 150 | |
| Output Pulse-Width Matching | PM | PWIN=10us, PM=PWOUT-PWIN | - | - | 100 | |

# 28. Package Information

## 28.1 LQFP-48 7x7mm (AD48) Outline Dimensions

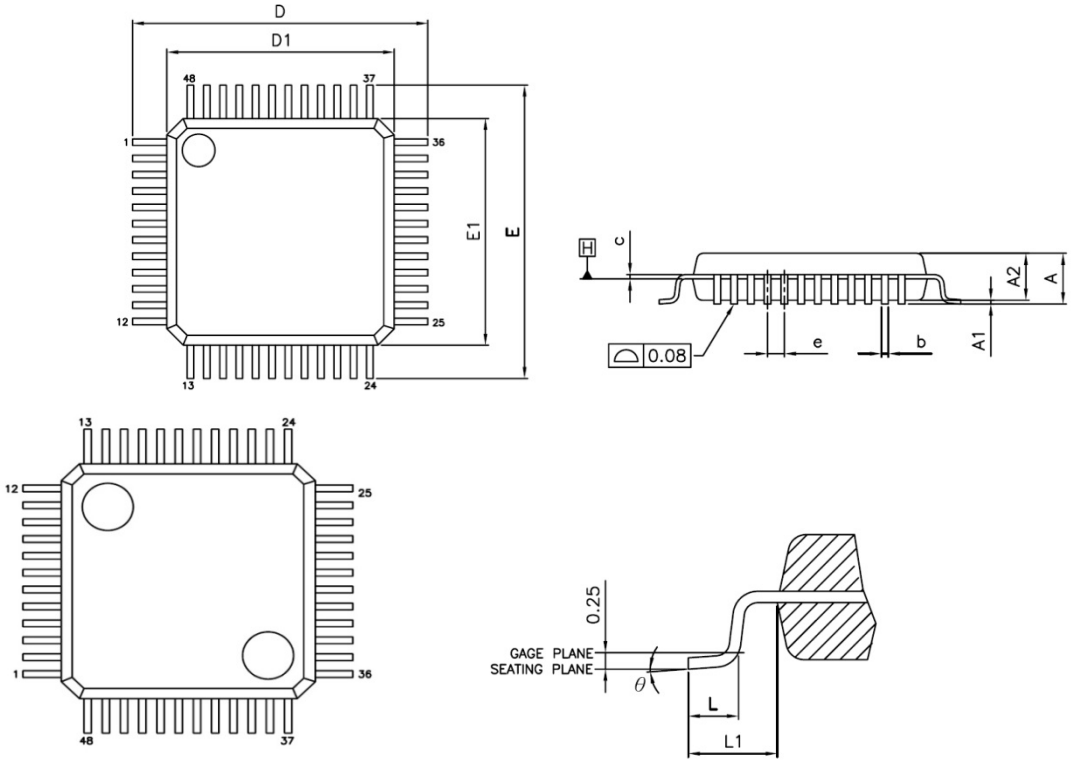


| Unit | mm | | | inch | | |
|---|---|---|---|---|---|---|
| Symbols | Min. | Nom. | Max. | Min. | Nom. | Max. |
| A | --- | --- | 1.60 | --- | --- | 0.063 |
| A1 | 0.05 | --- | 0.15 | 0.002 | --- | 0.006 |
| A2 | 1.35 | 1.40 | 1.45 | 0.053 | 0.055 | 0.057 |
| b | 0.17 | 0.22 | 0.27 | 0.007 | 0.009 | 0.011 |
| c | 0.09 | --- | 0.20 | 0.004 | --- | 0.008 |
| D | 9.00 BSC | | | 0.354 BSC | | |
| D1 | 7.00 BSC | | | 0.276 BSC | | |
| E | 9.00 BSC | | | 0.354 BSC | | |
| E1 | 7.00 BSC | | | 0.276 BSC | | |
| e | 0.50 BSC | | | 0.020 BSC | | |
| L | 0.45 | 0.60 | 0.75 | 0.018 | 0.024 | 0.030 |
| L1 | 1.00 REF | | | 0.039 REF | | |
| θ | 0˚ | 3.5˚ | 7˚ | 0˚ | 3.5˚ | 7˚ |

## 28.2 Marking Distinguish

### 28.2.1 Standard Ink (w/o code)

Figure 28.1 Standard Ink (w/o code)

LQFP48

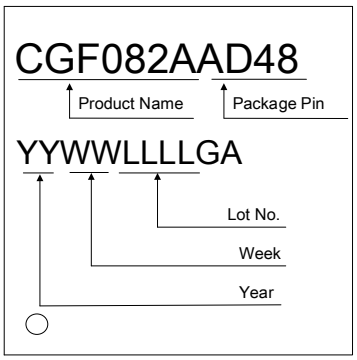


### 28.2.2 Customization Ink (with customization code)

Figure 28.2 Customization Ink (with customization code)

LQFP48

# 29.Ordering Information

## 29.1 Standard Product Name

Figure 29.1 Standard Product Name

| CG | F082A | AD48 |
|---|---|---|
| *CheerGoal* | *Product Name* | *Package*<br>*AD48 : LQFP-48* |

## 29.2 Customization Product Name

- With customization code, produce by order.

Figure 29.2 Customization Product Name

| CG | F082A | AD48 | - | XXXX |
|---|---|---|---|---|
| *CheerGoal* | *Product Name* | *Package*<br>*AD48 : LQFP-48* | | *Customization Code NO.* |

# 30. Revision History

| Update Date | Version | Modify content |
|---|---|---|
| 2024/05/03 | v0.00 | Preliminary |
| 2024/08/16 | v0.10 | 1. The links of contents updated<br>2. Features updated |
| 2025/08/14 | v0.20 | Minor editorial corrections. |

# 31. Disclaimers

Herein, CheerGoal stands for "***CheerGoal Technology Co., Ltd.***"

**Life Support** — This product is not designed for use in medical, life-saving or life-sustaining applications, or systems where malfunction of this product can reasonably be expected to result in personal injury. Customers using or selling this product for use in such applications do so at their own risk and agree to fully indemnify CheerGoal for any damages resulting from such improper use or sale.

**Right to Make Changes** — CheerGoal reserves the right to make changes in the products - including circuits, standard cells, and/or software - described or contained herein in order to improve design and/or performance. When the product is in mass production, relevant changes will be communicated via an Engineering Change Notification (ECN).