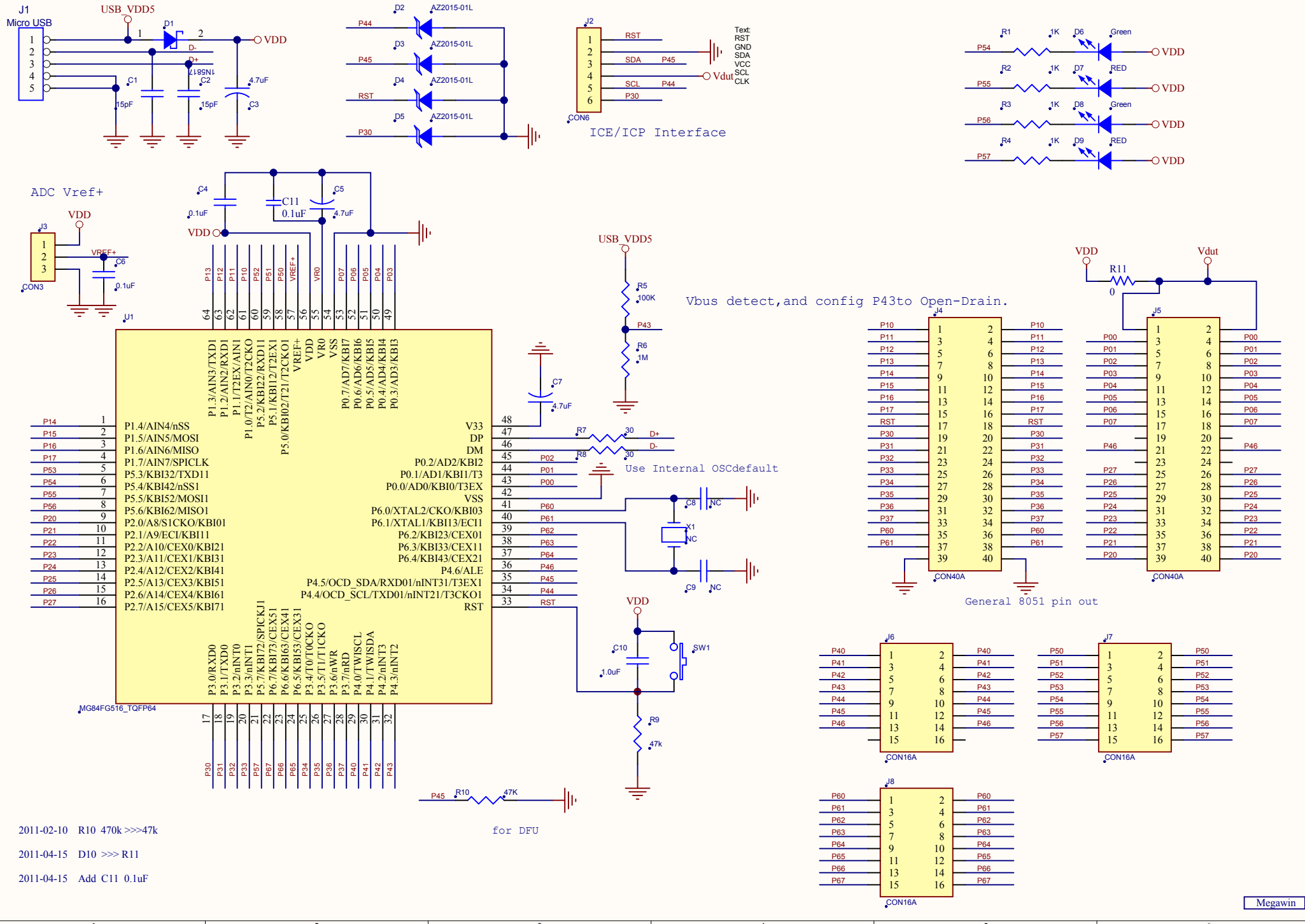
J1
Micro USB
USB_VDD5
D1
VDD
D-
D+
1N5817
C1
15pF
C2
15pF
C3
4.7uF
D2
AZ2015-01L
D3
AZ2015-01L
D4
AZ2015-01L
D5
AZ2015-01L
P44
P45
RST
P30
J2
RST
SDA
P45
SCL
P44
P30
Vdut
CON6
Text:
RST
GND
SDA
VCC
SCL
CLK
ICE/ICP Interface
R1
1K
D6
Green
P54
R2
1K
D7
RED
P55
R3
1K
D8
Green
P56
R4
1K
D9
RED
P57
ADC Vref+
J3
VDD
VREF+
C6
0.1uF
CON3
C4
0.1uF
C11
0.1uF
C5
4.7uF
U1
MG84FG516_TQFP64
P1.4/AIN4/nSS
P1.5/AIN5/MOSI
P1.6/AIN6/MISO
P1.7/AIN7/SPICLK
P5.3/KBI32/TXD11
P5.4/KBI42/nSS1
P5.5/KBI52/MOSI1
P5.6/KBI62/MISO1
P2.0/A8/S1CKO/KBI01
P2.1/A9/ECI/KBI11
P2.2/A10/CEX0/KBI21
P2.3/A11/CEX1/KBI31
P2.4/A12/CEX2/KBI41
P2.5/A13/CEX3/KBI51
P2.6/A14/CEX4/KBI61
P2.7/A15/CEX5/KBI71
P1.3/AIN3/TXD1
P1.2/AIN2/RXD1
P1.1/T2EX/AIN1
P1.0/T2/AIN0/T2CKO
P5.2/KBI22/RXD11
P5.1/KBI12/T2EX1
P5.0/KBI02/T21/T2CKO1
VREF+
VDD
VR0
VSS
P0.7/AD7/KBI7
P0.6/AD6/KBI6
P0.5/AD5/KBI5
P0.4/AD4/KBI4
P0.3/AD3/KBI3
V33
DP
DM
P0.2/AD2/KBI2
P0.1/AD1/KBI1/T3
P0.0/AD0/KBI0/T3EX
VSS
P6.0/XTAL2/CKO/KBI03
P6.1/XTAL1/KBI13/ECI1
P6.2/KBI23/CEX01
P6.3/KBI33/CEX11
P6.4/KBI43/CEX21
P4.6/ALE
P4.5/OCD_SDA/RXD01/nINT31/T3EX1
P4.4/OCD_SCL/TXD01/nINT21/T3CKO1
RST
P3.0/RXD0
P3.1/TXD0
P3.2/nINT0
P3.3/nINT1
P5.7/KBI72/SPICKJ1
P6.7/KBI73/CEX51
P6.6/KBI63/CEX41
P6.5/KBI53/CEX31
P3.4/T0/T0CKO
P3.5/T1/T1CKO
P3.6/nWR
P3.7/nRD
P4.0/TWISCL
P4.1/TWISDA
P4.2/nINT3
P4.3/nINT2
C7
4.7uF
USB_VDD5
R5
100K
P43
R6
1M
R7
30
D+
R8
30
D-
Use Internal OSCdefault
C8
NC
X1
NC
C9
NC
VDD
C10
1.0uF
SW1
R9
47k
P45
R10
47K
for DFU
Vbus detect,and config P43to Open-Drain.
VDD
R11
0
Vdut
J4
CON40A
J5
CON40A
General 8051 pin out
J6
CON16A
J7
CON16A
J8
CON16A
2011-02-10 R10 470k >>>47k
2011-04-15 D10 >>> R11
2011-04-15 Add C11 0.1uF
Megawin

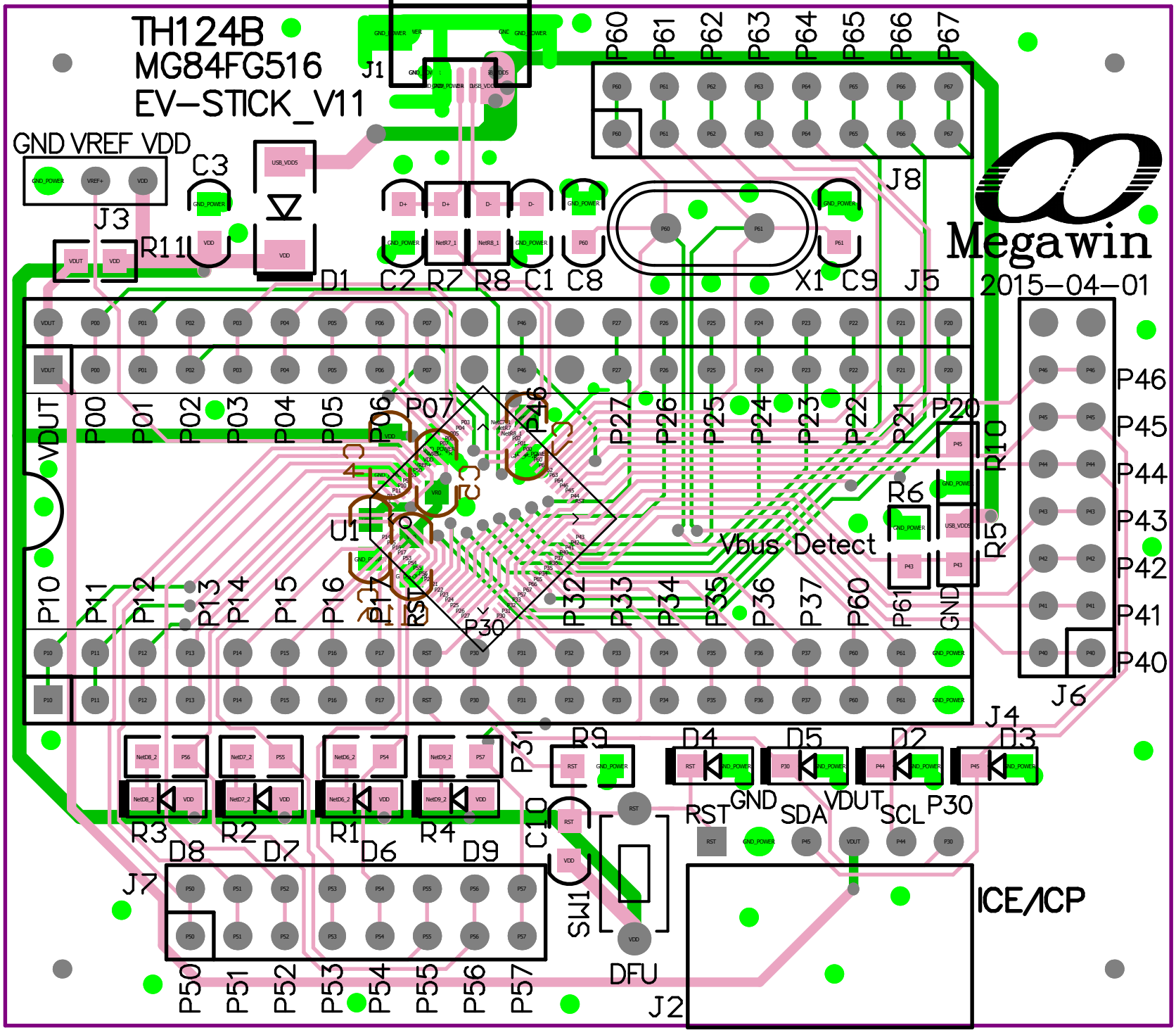
TH124B
MG84FG516
EV-STICK_V11
Megawin
2015-04-01
GND VREF VDD
J1
J3
J8
J5
J6
J4
J7
J2
C3
R11
D1
C2
R7
R8
C1
C8
X1
C9
P60
P61
P62
P63
P64
P65
P66
P67
VDUT
P00
P01
P02
P03
P04
P05
P06
P07
P46
P27
P26
P25
P24
P23
P22
P21
P20
R10
R6
R5
U1
Vbus Detect
P10
P11
P12
P13
P14
P15
P16
P17
RST
P30
P32
P33
P34
P35
P36
P37
P60
P61
GND
P46
P45
P44
P43
P42
P41
P40
P31
R9
D4
D5
D2
D3
R3
R2
R1
R4
D8
D7
D6
D9
C10
SW1
DFU
RST
GND
SDA
VDUT
SCL
P30
ICE/ICP
P50
P51
P52
P53
P54
P55
P56
P57