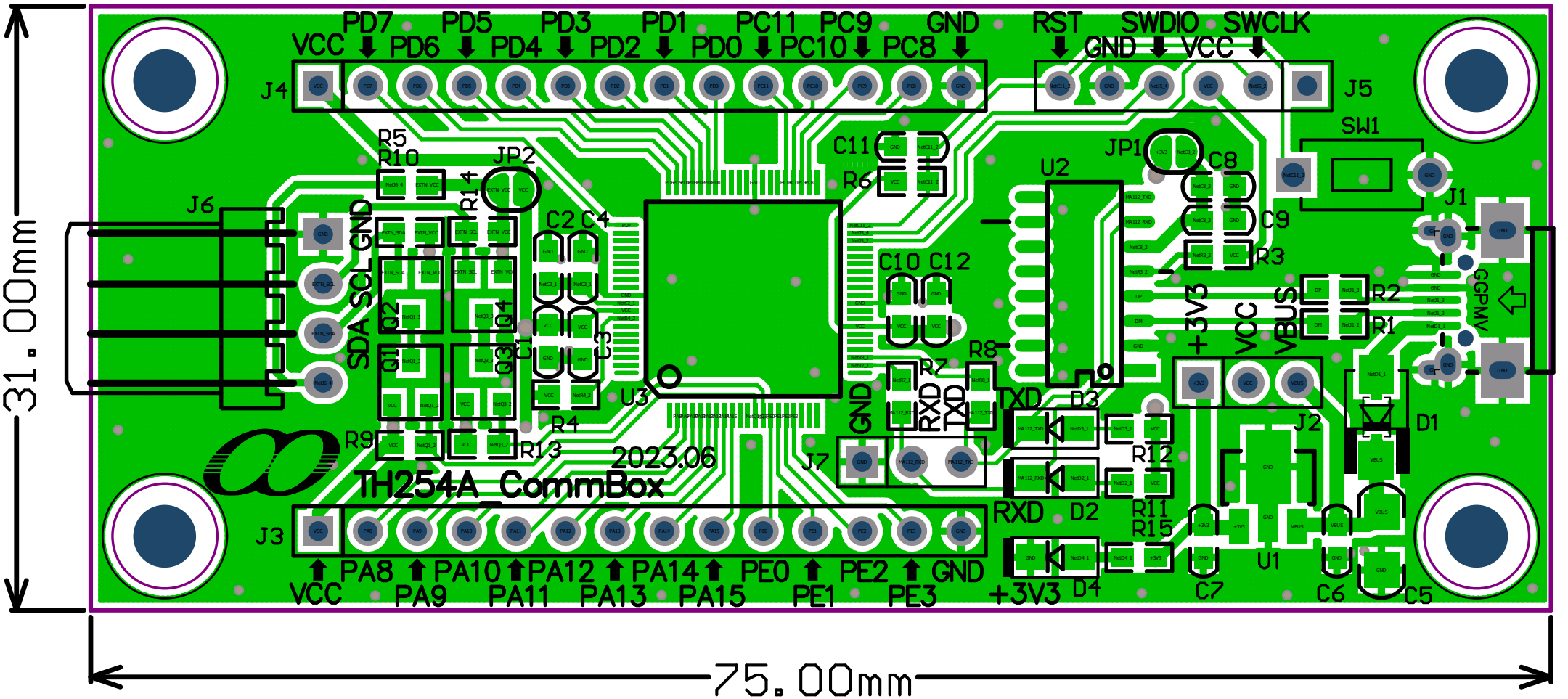
PD7 PD5 PD3 PD1 PC11 PC9 GND RST SWDIO SWCLK
VCC PD6 PD4 PD2 PD0 PC10 PC8 GND VCC
J4
J5
SW1
R5
R10
JP2
R14
C11
R6
U2
JP1
C8
J1
J6
C2 C4
C9
R3
C10 C12
SDA SCL GND
Q2
Q4
Q1
Q3
C1
C3
U3
R8
R7
R2
R1
+3V3 VCC VBUS
GGPMV
TXD
D3
RXD
TXD
GND
J7
R4
R9
R13
2023.06
TH254A CommBox
J2
D1
R12
RXD
D2
R11
R15
J3
U1
PA8 PA10 PA12 PA14 PE0 PE2 GND
VCC PA9 PA11 PA13 PA15 PE1 PE3
+3V3
D4
C7
C6
C5
31.00mm
75.00mm

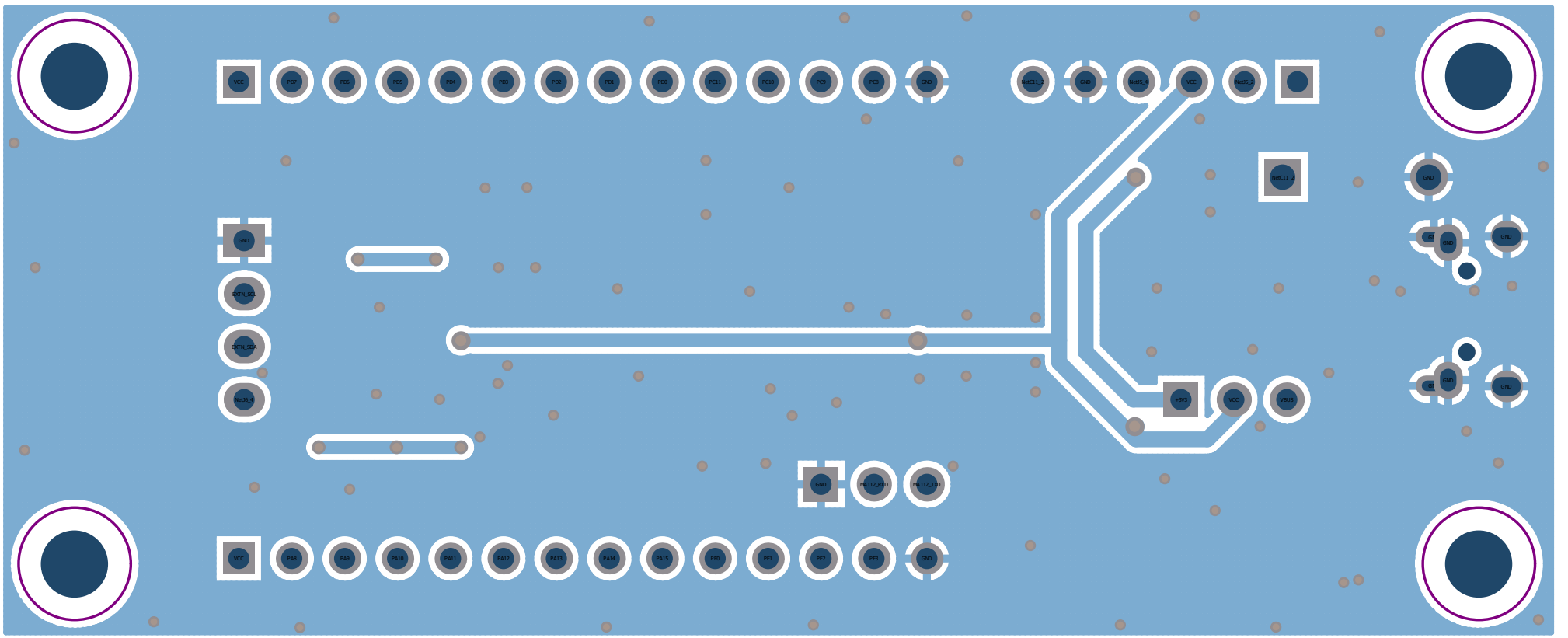
VCC
PD7
PD6
PD5
PD4
PD3
PD2
PD1
PD0
PC11
PC10
PC9
PC8
GND
NetC11_1
GND
NetC5_4
VCC
NetC5_3
NetC11_3
GND
GND
GND
GND
GND
GND
EXTN_SCL
EXTN_SDA
NetOE_4
+3V3
VCC
VBUS
GND
MPU12_RXD
MPU12_TXD
VCC
PA8
PA9
PA10
PA11
PA12
PA13
PA14
PA15
PB0
PB1
PB2
PB3
GND

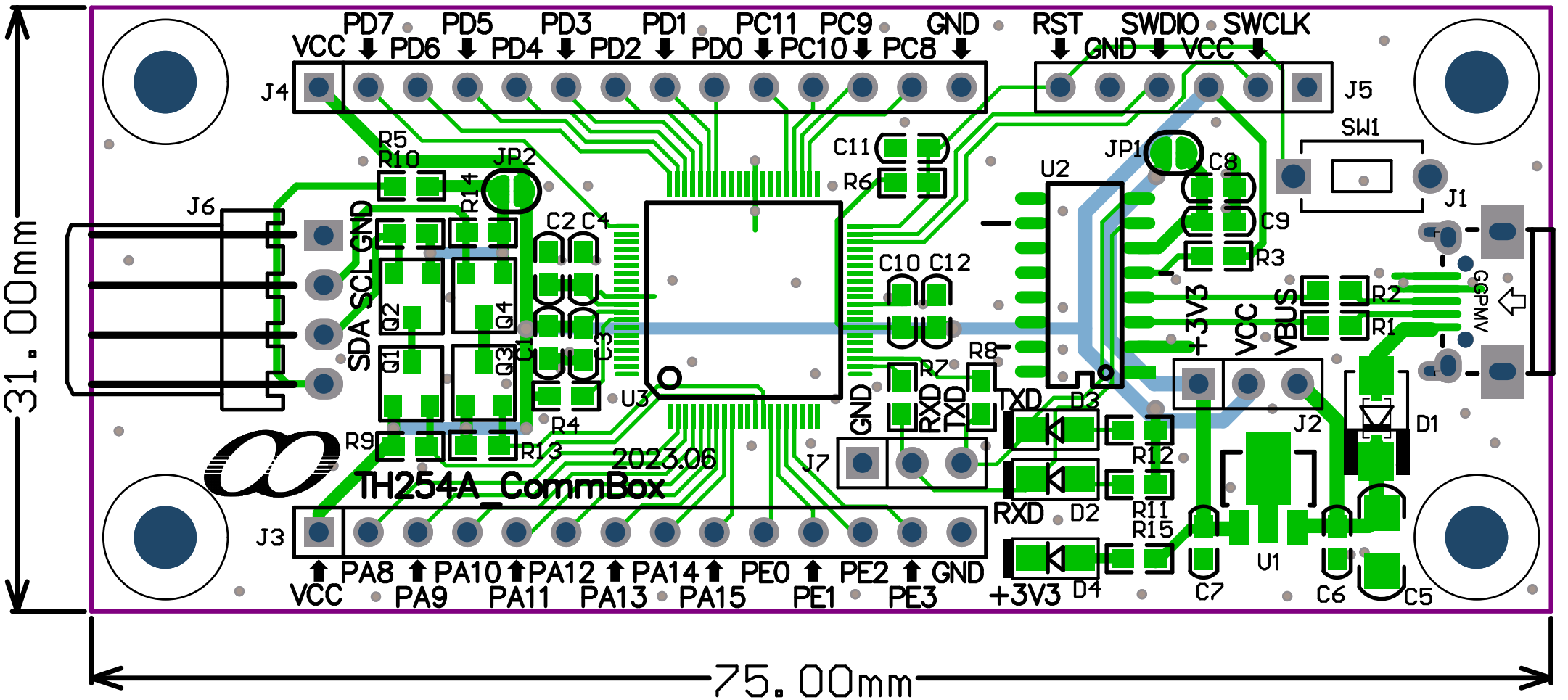
PD7 PD5 PD3 PD1 PC11 PC9 GND RST SWDIO SWCLK
VCC PD6 PD4 PD2 PD0 PC10 PC8 GND VCC
J4
J5
SW1
J1
J6
R5
R10
JP2
R14
C11
R6
U2
JP1
C8
C9
R3
C2 C4
C10 C12
SDA SCL GND
Q1 Q2 Q3 Q4
C1 C3
U3
R4
R9
R13
R7
R8
GND RXD TXD
J7
TXD
D3
RXD
D2
D4
+3V3
R12
R11
R15
+3V3 VCC VBUS
J2
R2
R1
D1
GGPWV
U1
C7
C6
C5
2023.06
TH254A_CommBox
J3
PA8 PA10 PA12 PA14 PE0 PE2 GND
VCC PA9 PA11 PA13 PA15 PE1 PE3
31.00mm
75.00mm

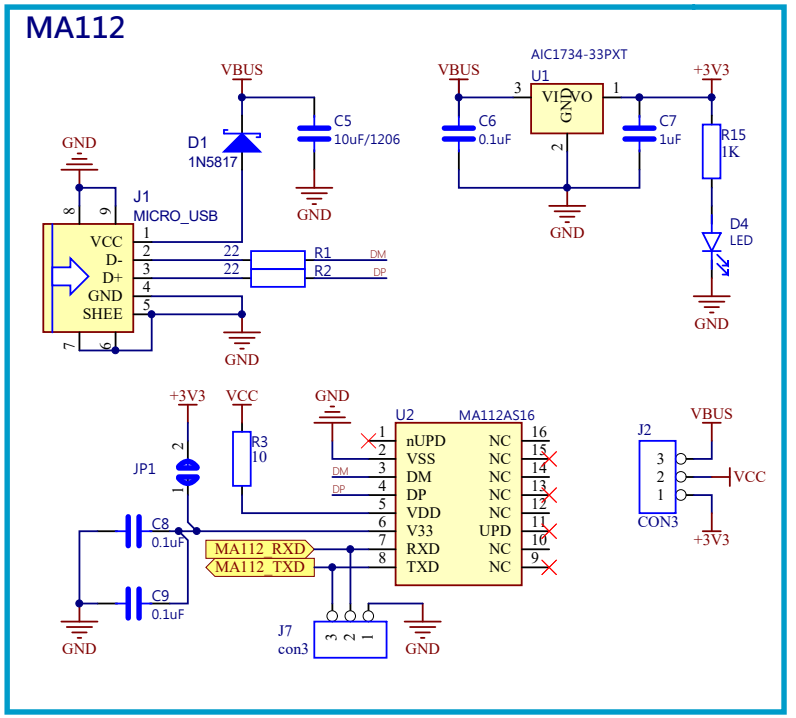

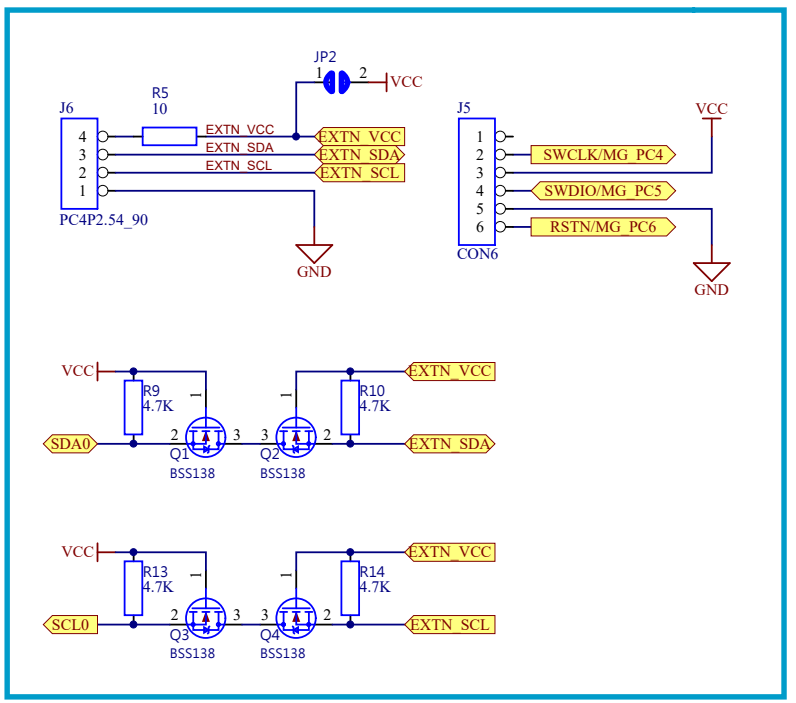

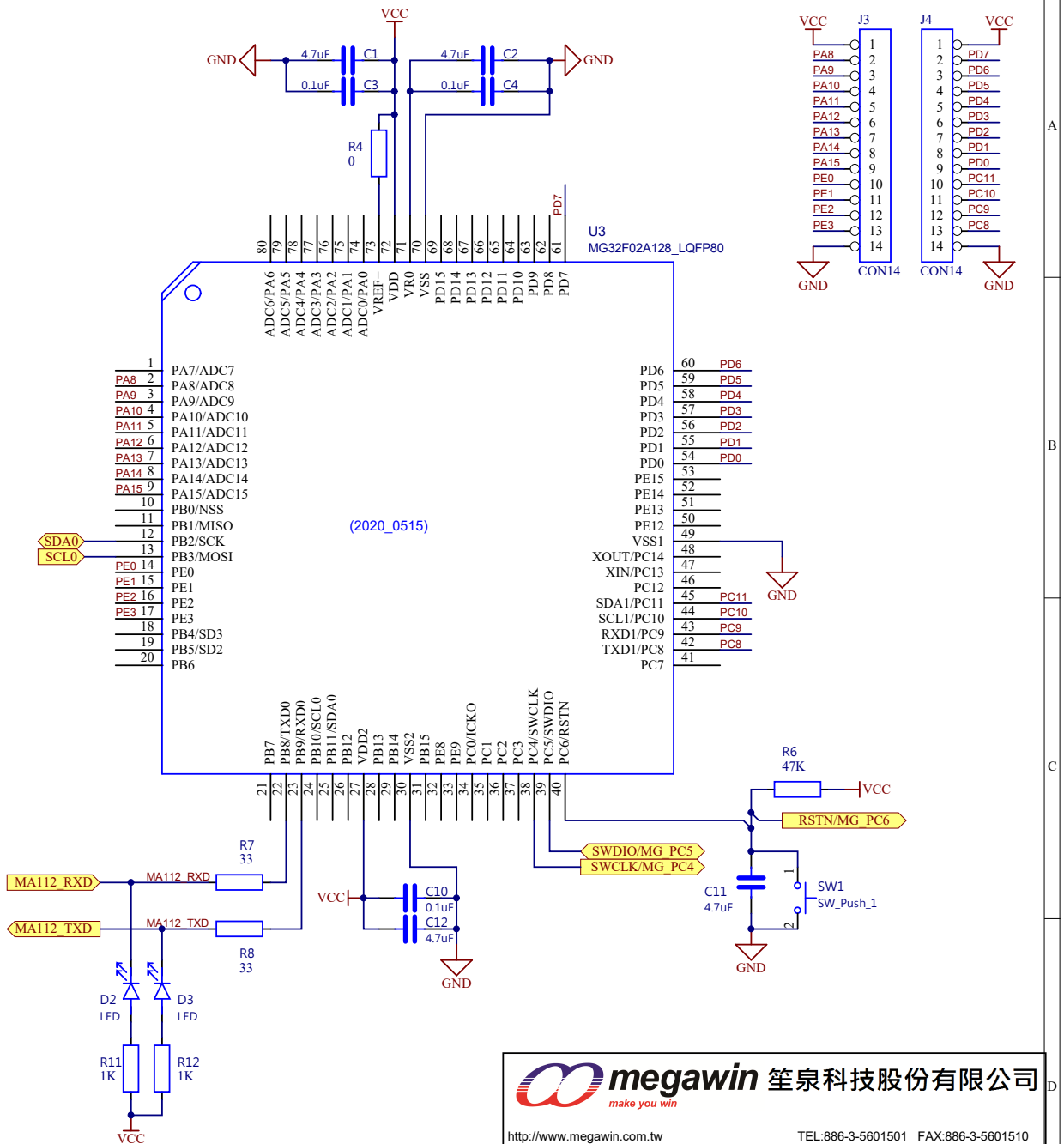

megawin 笙泉科技股份有限公司
make you win

http://www.megawin.com.tw TEL:886-3-5601501 FAX:886-3-5601510

Document Number	Rev
TH254A_CommBox.SchDoc	

Size	Date	Sheet
A4	2023/6/16	1 of 1